500 RMX

PIEZAS DE RECAMBIO
PIECES DETACHEES
SPARE PARTS
ERSATZTEILLISTE

500 RMX

Piezas para el modelo

Pieces pour le modele

Parts list model

Ersatzteile für die modelle

■ En las páginas siguientes encontrará los despieces de los distintos componentes del vehículo, así como la relación de las piezas que los componen debidamente referenciadas. Esto le servirá para identificar correctamente cualquier pieza que pueda precisar.
Para solicitar piezas de repuesto es preciso indicar: **Nº de bastidor, Nº de tabla, Nº de figura y Nº de referencia de la pieza.**
Para su comodidad y mejor servicio, pida los repuestos que precise al Distribuidor Oficial más próximo.
La Empresa Constructora se reserva el derecho de variar cualquier característica sin previo aviso, si lo considera conveniente para la mejora de sus vehículos.

■ *Dans les pages suivantes, vous troverez le détail des pièces détachées qui composent le véhicule. Ceci vous servira à identifier correctement les toutes les pièces dont vous pourriez avoin besoin.*
Pour commander des pièces, il sera nécessaire d'indiquer: ***le Nº de châssis, le Nº de planche, le Nº de figure et la reference de la pièce.***
Pour votre commodité et pour un meilleur service, commandez les pièces dont vous aurez besoin au Distributeur Officiel le plus proche.

■ *On the following pages you will find the list of spares of different components of the vehicle; and duly referenced to identity the spare you need.*
In order to ask for spares you must indicate: ***Nr. of chassis, Nr. of table. Nr. of figure and Nr. of reference.***
For your comfort and best service, please order the spares to your nearest Official Distributor.
The manufacturer reserves the right of changingtheir characteristics without any previous notice, if it is considered suitable to improve the vehicles.

■ *In vorliegenden Seiten möchten wir Ihnen die Detaillierung der verschiedenen Fahrzeugsbestandteilen sowie die dazugehörige ausführliche Stückliste, die zur richtigen Identifizierung jedes von Ihnen benötigten Einzelteils diene, anbieten. Bei Bestellung von Ersatzteilen ist folgendes anzugeben:* ***Fahrgestell-, Tabelle-, Abbildungs- und Stücknummer.***
Um Ihnen die Arbeit zu erleichtern und damit Sie eine bessere Bedienung geniessen können, bieten wir Ihnen die Möglichkeit, alle nötigen Ersatzteile bei Ihrem nächsten Alleinvertriebshändler unserer Firma zu bestellen.
In dem Wunsch, seine Fahrzuege fortwährend zu verbessern, behält sich der Herstellerbetrieb das Recht vor, die vorstehenden Eigenschaften zu verändern.

Índice
Index
Index
Index

Motor / Moteur / Engine / Motor
Motor y silenciador / Moteur et silencieux / Engine and muffler / Motor und auspuff (HATZ)..... 7
Motor y silenciador / Moteur et silencieux / Engine and muffler / Motor und auspuff (HATZ)..... 8
Embrague / Embrayage / Clutch / Kupplung 9
Filtro Aire / Filtre a air / Air cleaner / Luftfilter 10
Depósito combustible / Reservoir combustible / Fuel tank / Kraftstoffbehälter 11
Soporte motor / Supports moteur / Engine supports / Motorhalter 12
Radiador / Radiateur / Radiator / Kühler (PERKINS).....13
Manivela arranque / Manivelle demarreur / Starting handle / Andrekkurbel 14

Transmisión / Transmission / Transmission / Antrieb
Campana embrague / Carter embrayage / Clutch bell housing / kupplungsloke..... 15
Caja de cambios (ext.) / Boite a vitesses (ext.) / Gearbox (ext.) Innerschaltkasten..... 16
Caja de cambios (int.) / Boite a vitesses (int.) / Gearbox (int.) Innerschaltkasten..... 17
Diferencial / Differentiel / Differential / Differential..... 18
Palancas mandos cambio / Leviers boite vitesses / Shift gear levers / Gansgschaltungssteurungen..... 19
Puente delantero / Pont avant / Front axle / Vorderachse 20
Frenos hidráulicos / Freins hydrauliques / Hydraulic brakes / Hydraulische bremsen..... 21
Puente directriz / essieu directeur / Rear axle / Leitbrücke..... 22
Cilindro dirección / Essieu directeur / Steering cylinder / Lenkungszilinder..... 23

Acelerador / Accelerateur / Accelerator / Gas
Acelerador / Accelerateur / Accelerator / Gas 24

Bastidor / Chassis / Chassis / Farhgestell
Bastidor y contrapeso / Chassis et contrepoids / Chassis and counterweights / Fahrgestell und gegengewicht 25
Cilindro / Cylindre / Cylinder / Zylinder 26
Brazo pala / Bras pelle/ Shovel arm / Schaufelarm 27

Opciones y variantes / Options et variantes / Options and variants / Möglichkeiten und varianten
Pala y tolva / Pelle et benne / Shovel and skip/ Schaufel und mulde..... 28

Embrague / Embrayage / Clutch / Kupplung
Pedales / Pedales / Pedals / Pedalwerk..... 29

Freno / Frein / Brake / Fussbremspedal
Instal. frenos hidráulico / Install. freins hydraulique / Hydraulic brake installation / Bremskreistauf hydraulik 30
Bomba de frenos / Pompe de freins / Brake pump / Bremspumpe 31
Freno de estacionamiento / Frein de stationnement / Parking brake / Feststellbremse 32

Dirección / Direction / Steering / Lenkung
Dirección hidráulica / Direction hydraulique / Hydraulic steering / Hydraulische lenkung..... 33

Ruedas / Roues / Wheels / Räder
Ruedas delanteras / Roues avant / Front Wheels / Vorderäder..... 34
Ruedas traseras / Roues arrière / Rear Wheels / Hinteräder..... 35

Carroceria / Carrosserie / Body / Karosserie
Soportes dirección / Supports direction / Steering Bracket / Lenkung Halter..... 36
Protectores / Protecteurs / Protectors / Schützer..... 37
Faldones ruedas / Bavettes roues / Mudflaps / Blendbleche..... 38
Protector conductor / Protecteur conducteur / Driver protector / Fahrerschützer..... 39
Asiento / Siège / Seat / Sitz..... 40
Contrapeso / Contrepoids / Counterweight / Gegengewicht..... 41

Índice
Index
Index
Index

Soporte tambor / Support tambour / Drum support / Trommel-Unterstützung **42**
Canales descarga / Décharge canaux / Discharge channels / Begleichung-kanäle.....**43**
Conjunto bombo / Ensemble cuve / Drum assembly / Trommel gerät **44**
Cilindro volcado bombo / Cylindre renversé batteur / Cylinder overturned drummer / Zylinder kippte trommler um.....**45**
Motor accto. bomba / Moteur actionnement cuve / Drum actionament engine / Trommeln sie actionament-motor.....**46**
Bastidor / Chassis / Chassis / Fahrgestell.....**47**

Instalación circuito hidráulico / Installation circuit hydraulique
Hydraulic diagram installation / Baugruppen des Arbeits Hydraulik
Accionamiento / Actionnement / Actionament / Antrieb (HATZ).....**48**
Accionamiento / Actionnement / Actionament / Antrieb (PERKINS)..... **50**
Distribuidor / Distributeur / Distributor / Hydraulic verteiler und pumpe..... **52**
Depósito aceite / Reservoir a huile / Hydraulic oil tank / Ölbehalter.....**53**

Instalación eléctrica / Installation electrique
Electric intallation / Electroanlage
Arranque / Demarrage / Starting elec. electrische anlage (HATZ)..... **54**
Tablier arranque / Tableau demarrage / starting panel / analsspritzward (HATZ) **55**
Alumbrado / Eclairage / Lighting / Leuchtanlage (HATZ)..... **56**
Tablier alumbrado / Tableau eclairage / Lighting panel / Leuchtspretzwand (HATZ)..... **58**
Arranque / Demarrage / Starting elec. electrische anlage (PERKINS)..... **59**
Tablier arranque / Tableau demarrage / starting panel / analsspritzward (PERKINS) **60**
Alumbrado / Eclairage / Lighting / Leuchtanlage (PERKINS)..... **61**
Tablier alumbrado / Tableau eclairage / Lighting panel / Leuchtspretzwand (PERKINS)..... **62**
Faro giratorio / Girophare / Rotating beacon / Drehscheiwerfer..... **63**
Avisador acústico / Advertisseur acoustique / Acoustic warning / *Akustische Verwarnung*..... **64**

Acabados / Finite / Finish / Vollendet
Placas / Plaques / Plates / Platte **66**
Protector tablier / Protecteur tableau / Panel protector / Schützer anlasspritz..... **68**
Espejo retrovisor / Miroir retroviseur/ Rear-vision mirror / Rückspiegel..... **69**

4x4 transmisión / 4x4 transmission / 4x4 transmission / 4x4 antrieb
Puente directriz / Pont directrice / Axle transmission / Lenkachse..... **71**
Transmisión eje / Transmission pont / Axle transmission / Starrachse..... **72**
Transmisión rueda / Transmission roue / Tyre transmission / Rädergetriebe..... **73**
Cilindro dirección / Essieu cylinder / Steeering cylinder / lenkungszylinder..... **74**
Piñón ataque / Pignon / Drive pinion / Antriebsritzel **75**
Kit Desconector/Kit Deconnector/Disconnector kit/Ausrückmechanismus gruppe..... **76**
Desconector/*Deconnector/Disconnector/Ausrückmechanismus*..... ..... **77**
Tapa desconector/*Couvercle deconnector/Disconnector Cover/Ausrückmechanismus -Decke*..... **78**
Soporte válvula/*Support soupape/Valve support/Ventil-Unterstützung*..... ..... **79**
Instalación eléctrica/*Installation electrique/Electric installation/Electrische anlage*..... ..... **80**
Junta cardán / Jointe cardan / Cardan joint / Kardanwelle..... **81**
Topes en chasis / Heurt a chassis / Chassis bumpers / Achsanschlag..... **82**

Opciones y variantes / Options et variantes / Options and variants / Möglichkeiten und varianten
Dispositivo seguro / Appareil sécurité / Safety device / Sicherheit-Gerät **83**
Ruedas delanteras / Roues avant / Front wheels / Vorderäder..... **84**
Ruedas traseras / Roues arrière / Rear wheels / Hinteräder..... **85**
Ruedas anchas / Roues larges / Wide wheels / Breiteräder..... **86**

Motor
Moteur
Engine
Motor

Motor y Silenciador
Moteur et Silencieux
Engine and Muffler
Motor und Auspufftopf

HATZ

A partir del nºbastidor:
From chassis nr.:
(1) 277.44032

Fig. Nº *Fig. Nº* *Fig. Nº* *Bild Nr.*	Referencia *Reference* *Part Nº* *Teil Nr.*	Cantidad *Quantité* *Quantity* *Quantität*
1	40.00101.00	1 (1)
2	86.90000.01	1
3	86.90000.03	1
4	86.90000.02	1
5	40.20150.00	1
6	935.47051.66	1
7	40.02001.00	1
8	603.08020.86	2
9	104.08000.66	2
10	101.08000.66	2
11	02.01125.00	1

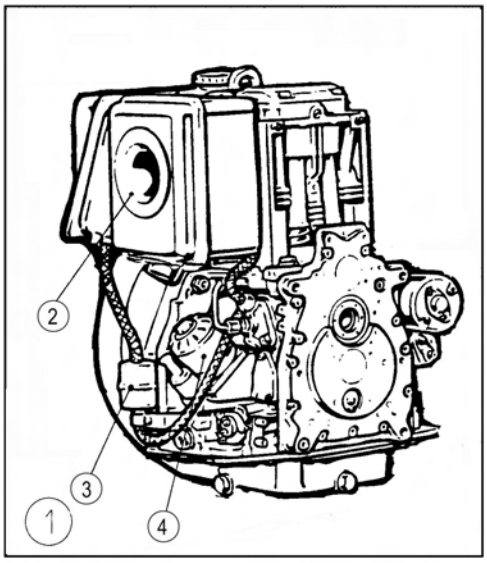

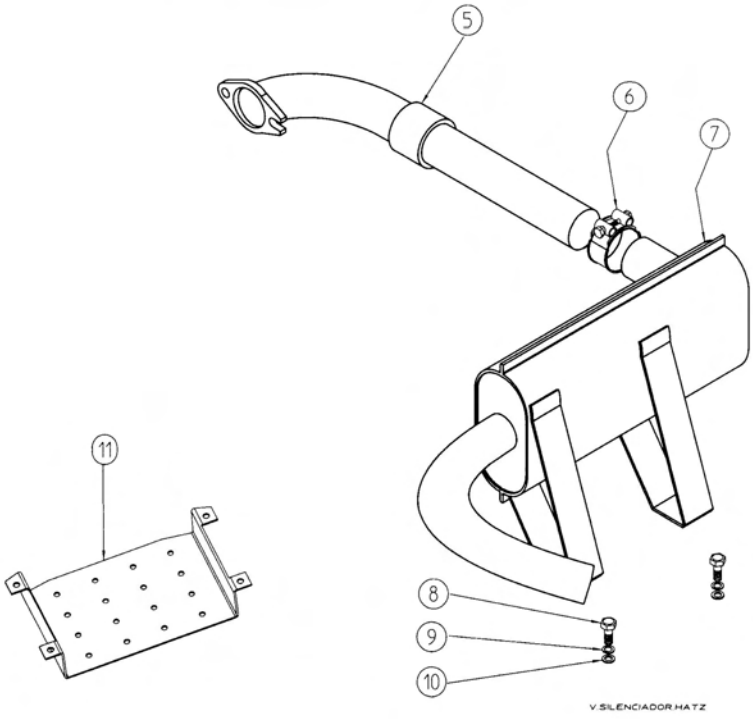

Motor
Moteur
Engine
Motor

Motor y Silenciador
Moteur et Silencieux
Engine and Muffler
Motor und Auspufftopf

PERKINS

Fig. Nº *Fig. Nº* *Fig. Nº* *Bild Nr.*	Referencia *Reference* *Part Nº* *Teil Nr.*	Cantidad *Quantité* *Quantity* *Quantität*
1	09.02110.00	1
2	09.02122.00	1
3	09.02121.00	1
4	09.02125.00	1
5	09.02123.00	1
6	09.02124.00	1
7	09.02130.00	1
8	09.13010.00	1
9	39.13172.00	1
10	39.40010.00	2
11	39.05020.00	1
12	39.34046.00	1
13	201.40002.50	2
14	09.02808.00	1

Fig. Nº *Fig. Nº* *Fig. Nº* *Bild Nr.*	Referencia *Reference* *Part Nº* *Teil Nr.*	Cantidad *Quantité* *Quantity* *Quantität*
15	09.00119.01	1
16	604.08040.86	4
17	104.08000.66	4
18	621.38015.86	2
19	101.10000.66	2
20	104.10000.66	2
21	09.02131.00	1
22	912.08016.00	2
23	469.03014.00	2
24	101.08000.66	2
25	104.08000.66	2
26	701.08000.66	2
27	15.01993.00	1
28	604.08070.86	1
29	603.08025.86	1

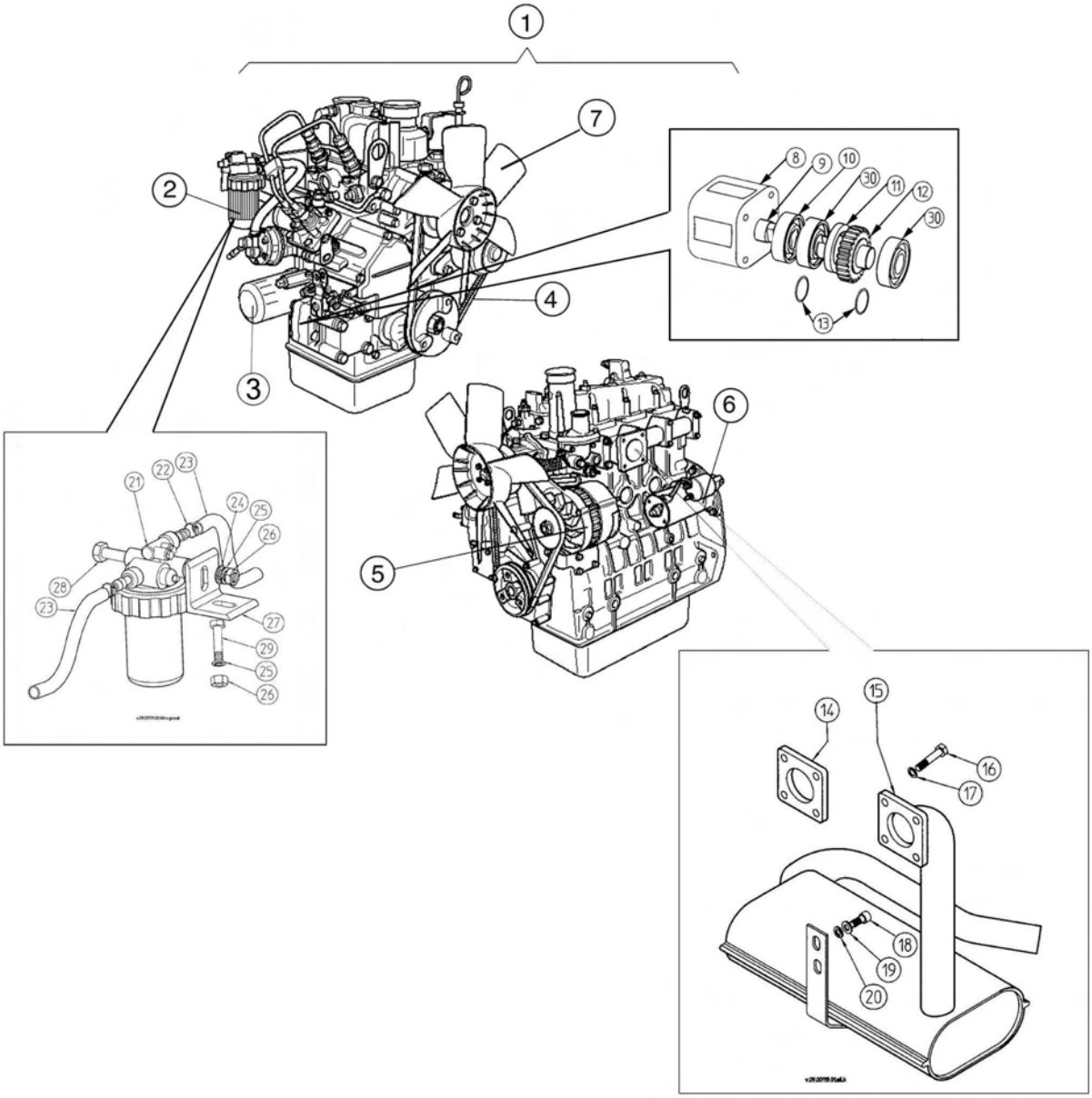

Motor
Moteur
Engine
Motor

Embrague
Embrayage
Clutch
Kupplung

Fig. Nº *Fig. Nº* *Fig. Nº* *Bild Nr.*	Referencia *Reference* *Part Nº* *Teil Nr.*	Cantidad *Quantité* *Quantity* *Quantität*
1	40.10213.00	1
2	621.51620.86	6
3	115.08000.66	1
4	309.17012.00	1
5	15.02011.01	1
6	10.00201.00	1
7	104.06000.66	6
8	603.06015.86	6
9	402.06015.00	3

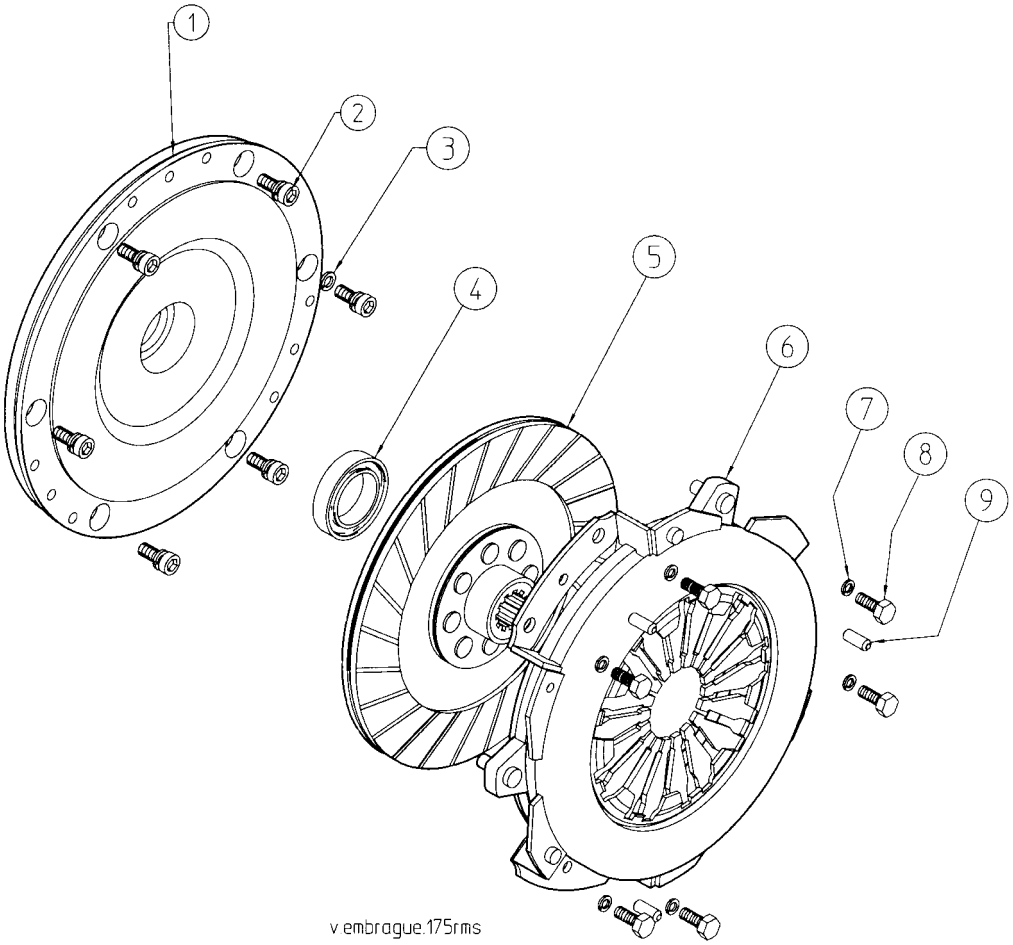

Motor
Moteur
Engine
Motor

Filtro aire
Filtre a aire
Air filter
Benennung

Fig. Nº *Fig. Nº* *Fig. Nº* *Bild Nr.*	Referencia *Reference* *Part Nº* *Teil Nr.*	Cantidad *Quantité* *Quantity* *Quantität*	
1	01.01590.00	1	
2	912.40060.66	1	
3	09.01200.00	1	PERKINS
4	09.01201.00	1	
5	630.08020.96	2	
6	104.08000.66	2	
7	701.08000.66	2	

Fig. Nº *Fig. Nº* *Fig. Nº* *Bild Nr.*	Referencia *Reference* *Part Nº* *Teil Nr.*	Cantidad *Quantité* *Quantity* *Quantität*	
8	09.01204.00	1	
9	912.32050.66	1	
10	86.90000.01	1	HATZ
11	43.50119.00	1	
12	709.10000.66	1	
13	16.01354.00	1	
14	43.11192.00	1	
15	10.02144.00	1	PERKINS
16	09.00230.00	1	PERKINS

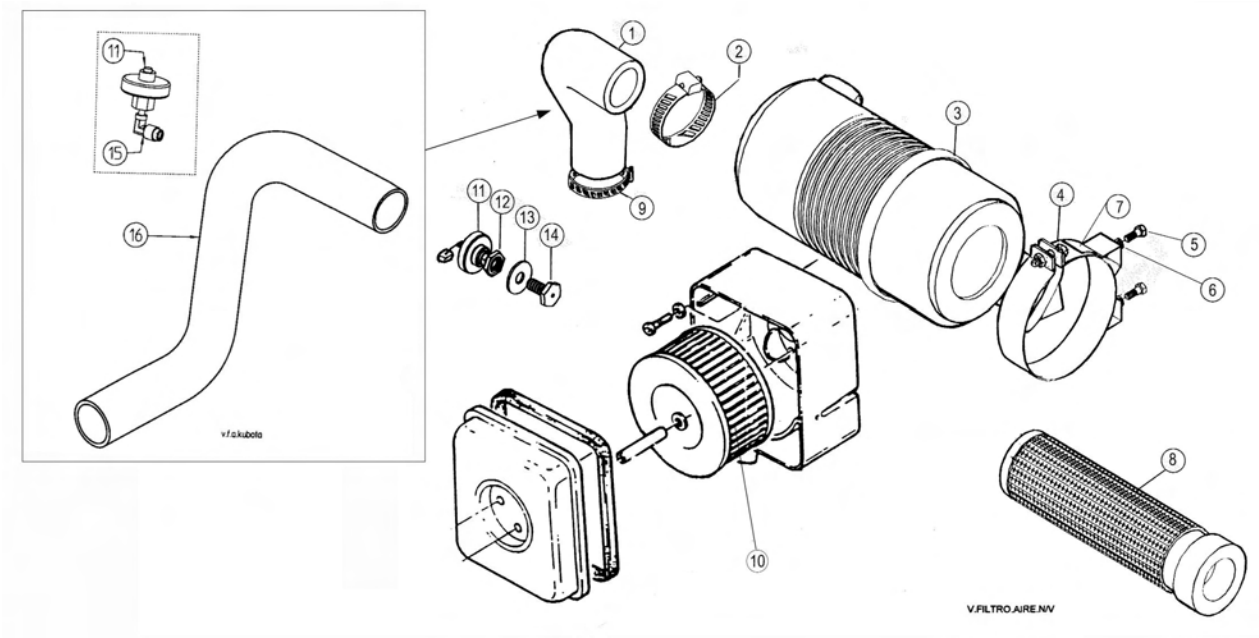

Motor
Moteur
Engine
Motor

Depósito combustible
Reservoir de carburant
Fuel tank
Kraftstoffbehälter

Fig. Nº *Fig. Nº* *Fig. Nº* *Bild Nr.*	Referencia *Reference* *Part Nº* *Teil Nr.*	Cantidad *Quantité* *Quantity* *Quantität*
1	02.09250.00	1
2	15.01524.00	1
3	630.08025.96	1
4	02.11101.00	1
5	711.08000.66	1
6	15.01524.00	1
7	502.05000.66	2
8	01.01925.00	1
9	43.00750.07	1
10	912.08000.66	1
11	02.00925.01	1
12	630.08020.96	4
13	107.08000.10	4
14	54.14400.00	1
15	80.06041.00	2
16	101.08000.66	4

Fig. Nº *Fig. Nº* *Fig. Nº* *Bild Nr.*	Referencia *Reference* *Part Nº* *Teil Nr.*	Cantidad *Quantité* *Quantity* *Quantität*
17	104.08000.66	4
18	107.14000.10	1
19	52.00110.02	1
20	912.08016.66	4
21	86.90000.03	1
22	43.14015.03	1
23	43.14015.49	1
24	43.14015.18	1

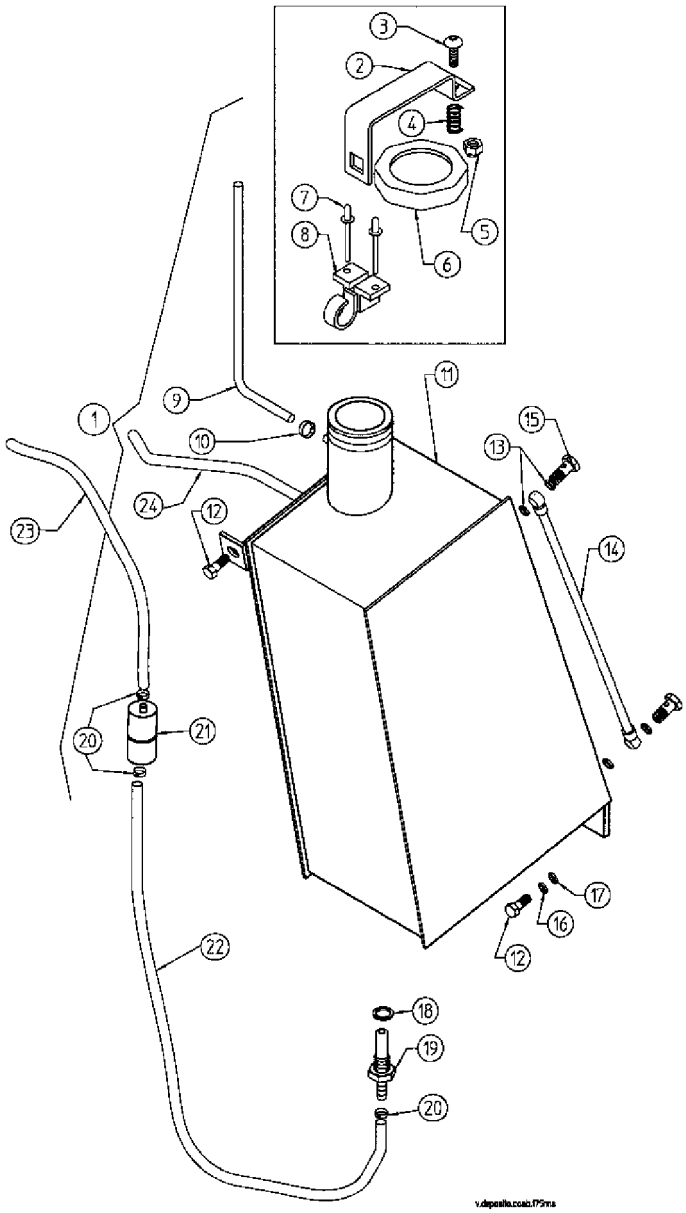

Motor
Moteur
Engine
Motor

Soporte motor
Supports moteur
Engine supports
Motorhalter

Fig. Nº *Fig. Nº* *Fig. Nº* *Bild Nr.*	Referencia *Reference* *Part Nº* *Teil Nr.*	Cantidad *Quantité* *Quantity* *Quantität*
1	604.14080.86	2
2	15.00114.01	2
3	15.00113.00	4
4	01.00112.10	1
5	37.00374.00	2
6	104.14000.66	2
7	701.14000.66	2
8	10.00776.00	1
9	604.10035.86	4

Fig. Nº *Fig. Nº* *Fig. Nº* *Bild Nr.*	Referencia *Reference* *Part Nº* *Teil Nr.*	Cantidad *Quantité* *Quantity* *Quantität*
10	40.10120.00	1
11	603.08045.86	2
12	10.00776.01	1
13	09.02217.00	1
14	603.12025.86	4
15	603.10025.86	4

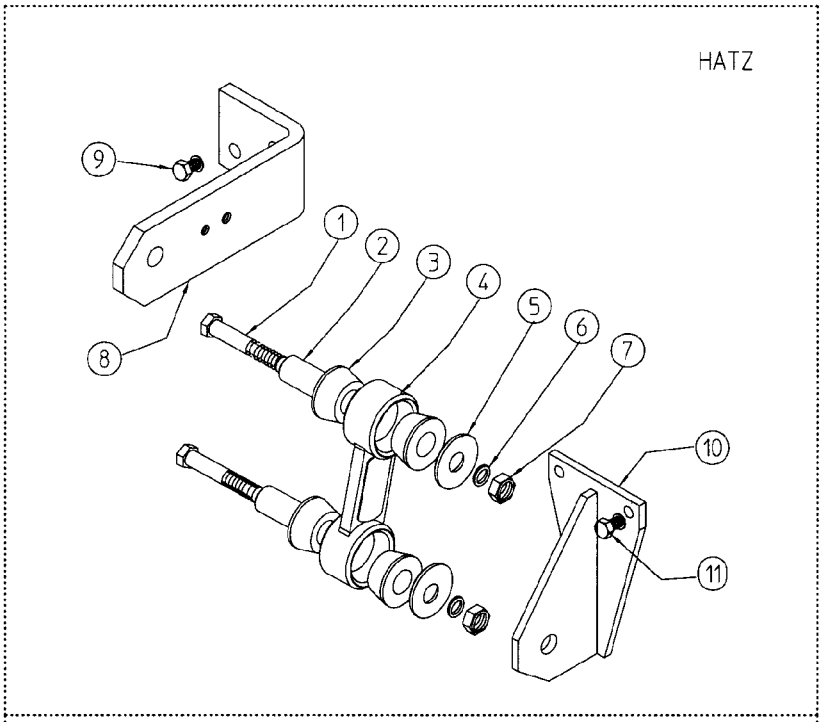

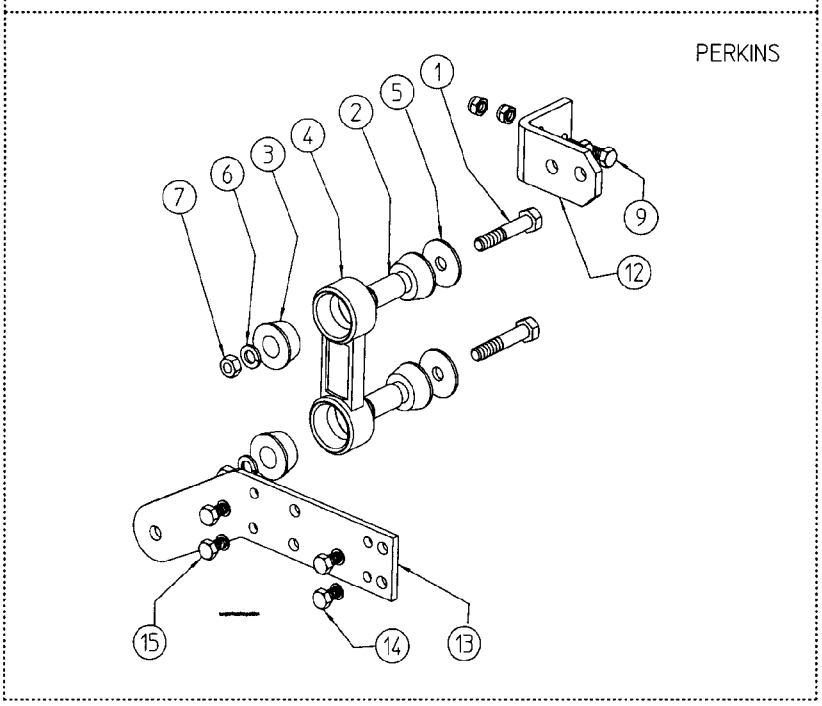

Motor
Moteur
Engine
Motor

Radiador PERKINS
Radiateur PERKINS
Radiator PERKINS
Kühler PERKINS

A partir del nºbastidor:
From chassis nr.:

(1) 092.30545
(2) 934.32249

Fig. Nº *Fig. Nº* *Fig. Nº* *Bild Nr.*	Referencia *Reference* *Part Nº* *Teil Nr.*	Cantidad *Quantité* *Quantity* *Quantität*
1	09.02821.00	1
2	701.05000.66	4
3	101.05000.66	4
4	608.05010.86	4
5	701.08000.66	1
6	09.00167.01	1
7	85.11300.65	1
8	09.60410.01	1
9	935.25040.66	6
9	938.27000.82	1 (1)
10	09.00118.00	1
11	09.00158.00	2
12	472.00411.00	3
13	09.00125.01	1
14	16.00760.00	2

Fig. Nº *Fig. Nº* *Fig. Nº* *Bild Nr.*	Referencia *Reference* *Part Nº* *Teil Nr.*	Cantidad *Quantité* *Quantity* *Quantität*
15	112.10000.66	2
16	711.10000.66	2
17	603.08030.86	2
18	104.08000.66	2
19	112.08000.66	2
20	09.00720.01	1
21	104.08000.66	2
22	603.08020.86	2
23	09.00172.00	1
24	09.00171.00	1
25	912.12140.66	1
26	912.08016.66	2
27	43.14105.40	1
28	912.20032.66	2
29	09.00246.20	1 (2)
30	09.00246.01	1 (2)

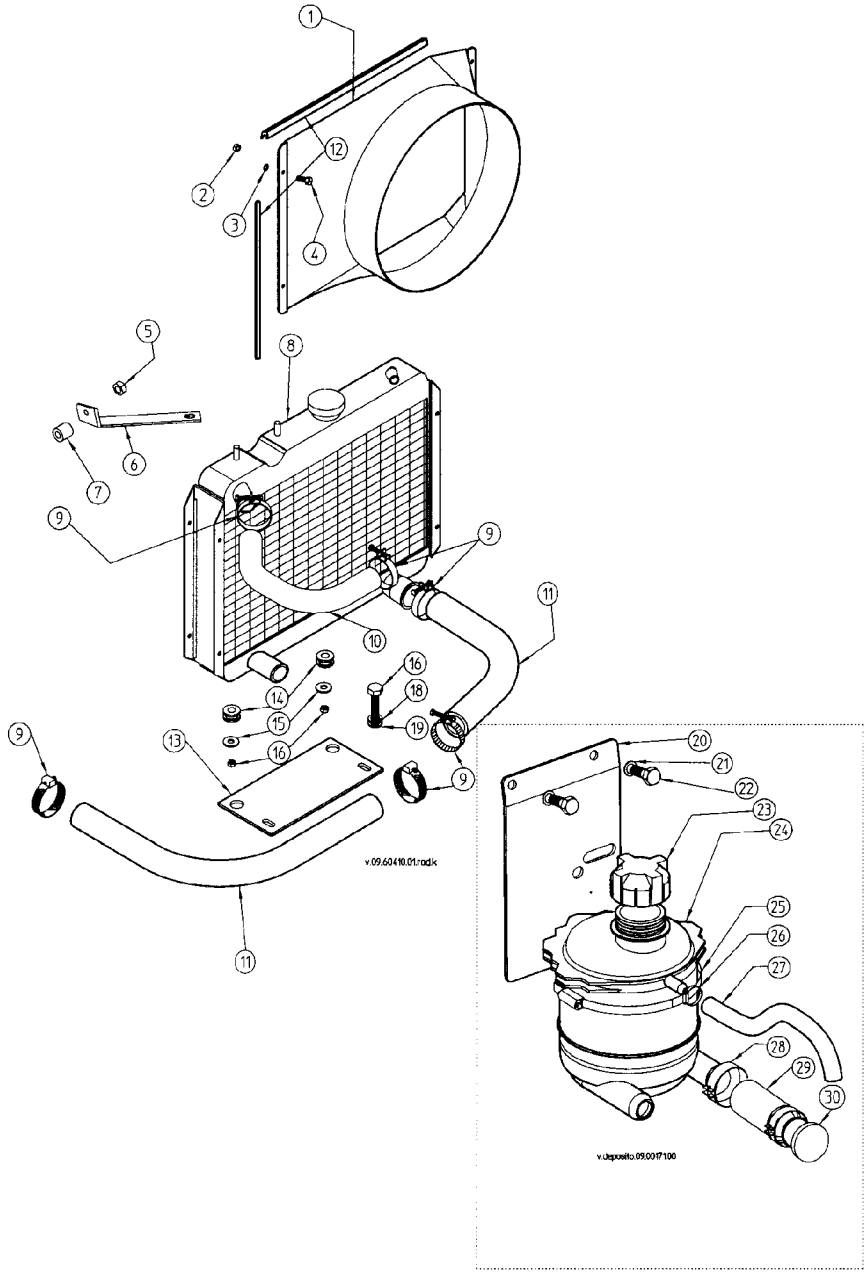

Motor
Moteur
Engine
Motor

Manivela arranque
Manivelle demarreur
Starting handle
Andrekkurbel

HATZ

Fig. Nº *Fig. Nº* *Fig. Nº* *Bild Nr.*	Referencia *Reference* *Part Nº* *Teil Nr.*	Cantidad *Quantité* *Quantity* *Quantität*
1	40.10178.01	1
2	104.08000.66	2
3	603.08015.86	2
4	603.06015.86	4
5	104.06000.66	4
6	01.00109.00	6
7	01.00115.01	1
8	402.05030.00	2
9	40.10179.01	1
10	403.10030.00	1

Fig. Nº *Fig. Nº* *Fig. Nº* *Bild Nr.*	Referencia *Reference* *Part Nº* *Teil Nr.*	Cantidad *Quantité* *Quantity* *Quantität*
11	101.22000.66	1
12	01.00113.00	1
13	10.00131.00	1
14	10.00157.00	1

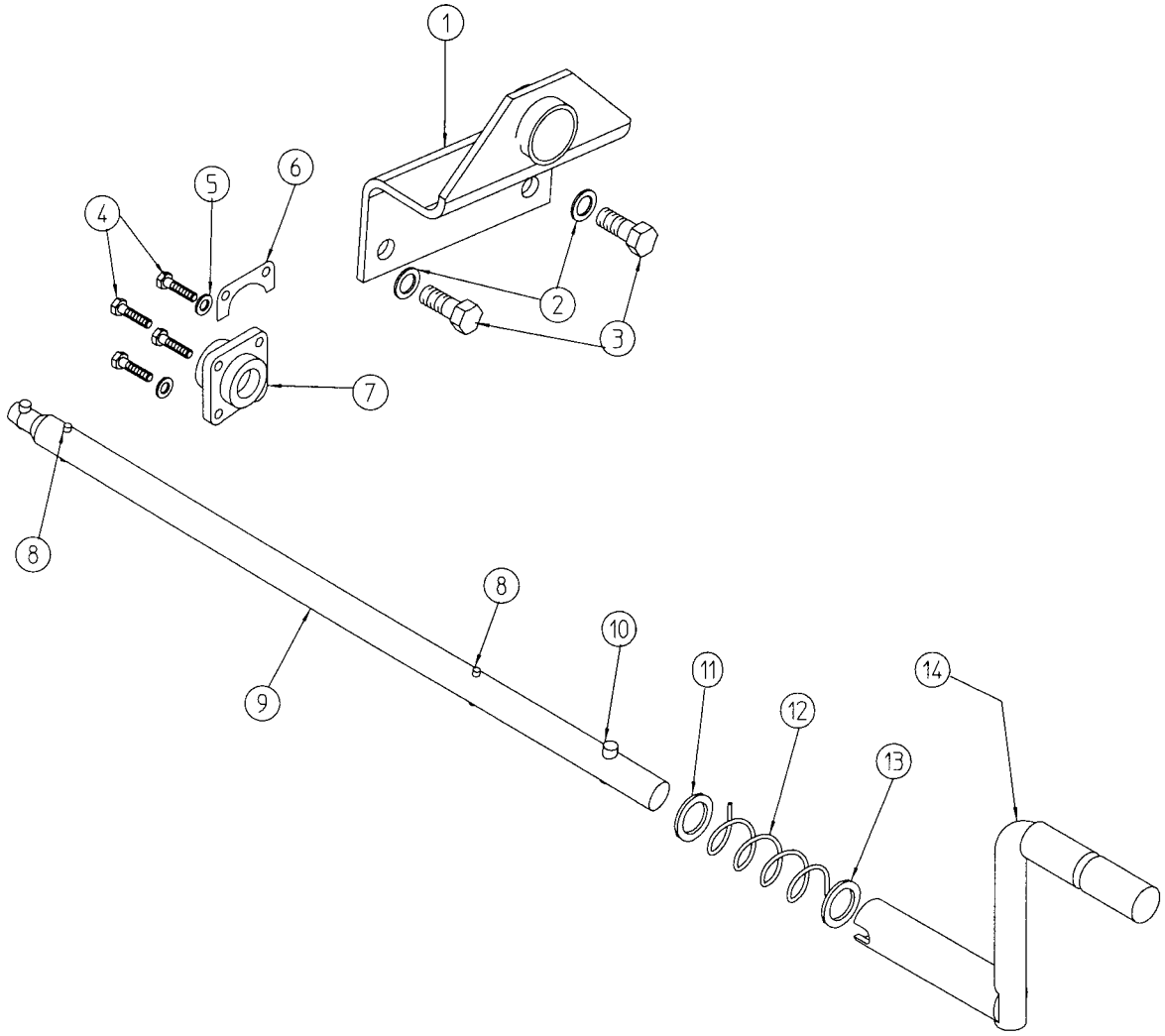

Transmisión
Transmission
Transmission
Antrieb

Campana embrague
Carter embrayage
Clutch bell housing
Kupplungsloke

A partir del nºbastidor:
From chassis nr.:
092.31212

Fig. Nº *Fig. Nº* *Fig. Nº* *Bild Nr.*	Referencia *Reference* *Part Nº* *Teil Nr.*	Cantidad *Quantité* *Quantity* *Quantität*	
1	711.12000.66	2	
2	01.00790.00	2	
3	15.00113.01	2	
4	15.00374.00	2	
5	15.00107.02	2	
6	104.14000.66	4	
7	604.14065.86	2	
8	603.14040.86	2	
9	15.00374.00	2	
10	15.00109.00	2	
11	15.00107.01	2	
12	604.14075.86	2	
13	15.00113.00	4	
14	15.00114.00	2	
15	37.00374.00	2	
16	45.04113.10	1	4x4
17	01.00223.02	1	

Fig. Nº *Fig. Nº* *Fig. Nº* *Bild Nr.*	Referencia *Reference* *Part Nº* *Teil Nr.*	Cantidad *Quantité* *Quantity* *Quantität*
18	01.00371.01	2
19	40.10180.00	1
20	604.10030.86	6
20	627.38030.86	6
21	104.10000.66	6
22	01.00220.01	1
23	01.00225.10	1
24	603.06015.86	3
25	45.04204.01	1
26	45.04211.01	1
27	01.00235.00	1
28	104.08000.66	3
29	603.08025.86	3
30	901.08000.33	1
31	401.04030.60	1
32	10.00020.01	1

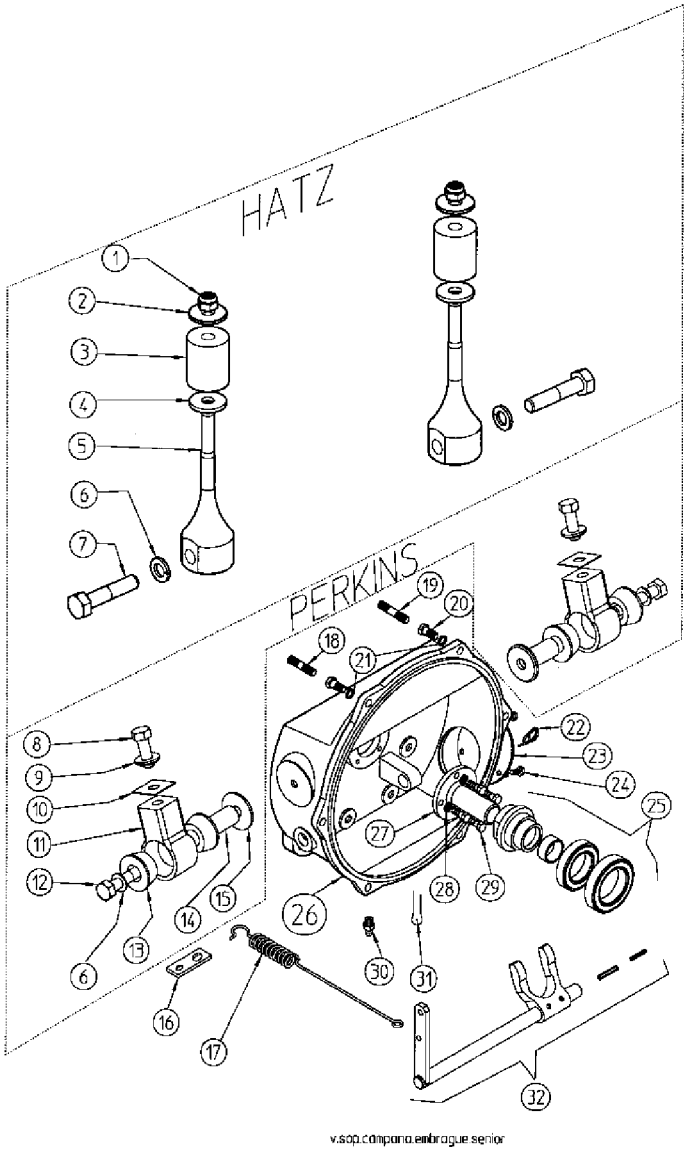

Transmisión
Transmission
Transmission
Antrieb

Caja de cambios (exterior)
Boite a vitesses (exterieur)
Gearbox (external)
Räderwechselkasten

Fig. Nº *Fig. Nº* *Fig. Nº* *Bild Nr.*	Referencia *Reference* *Part Nº* *Teil Nr.*	Cantidad *Quantité* *Quantity* *Quantität*
1	37.00007.00	1
1	40.00007.00	1 ***
2	603.08025.00	4
3	104.08000.66	4
4	01.03841.00	1
5	01.00383.01	4
6	01.00345.00	8
7	104.11000.66	8
8	00.00130.00	8
9	01.00383.00	4
10	01.00378.01	1
11	618.08020.86	4
12	80.01035.01	1
13	107.14000.10	2
14	10.00921.00	1
15	01.00351.04	1

Fig. Nº *Fig. Nº* *Fig. Nº* *Bild Nr.*	Referencia *Reference* *Part Nº* *Teil Nr.*	Cantidad *Quantité* *Quantity* *Quantität*
15	01.00351.06	1 ***(1)
16	01.00349.00	1
17	09.99007.00	1
18	01.00371.01	8
19	01.00350.02	1 (2)
20	104.10000.66	8
21	701.10000.66	3
22	01.00364.01	1
23	624.06015.66	6
24	01.00327.00	2
25	01.00365.00	2

*** Hatz

(1) a partir del nº de chasis 142.19926
(1) du nº du châssis 142.19926
(1) from the chassis nº 142.19926
(1) vom Chassis-nº 142.19926

(2) a partir del nº de chasis 934.28277
(2) du nº du châssis 934.28277
(2) from the chassis nº 934.28277
(2) vom Chassis-nº 934.28277

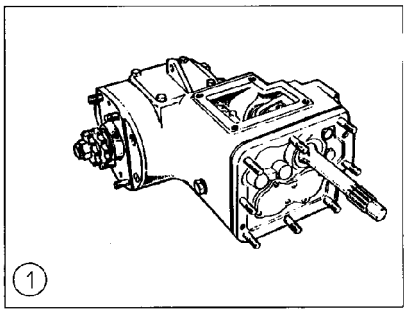

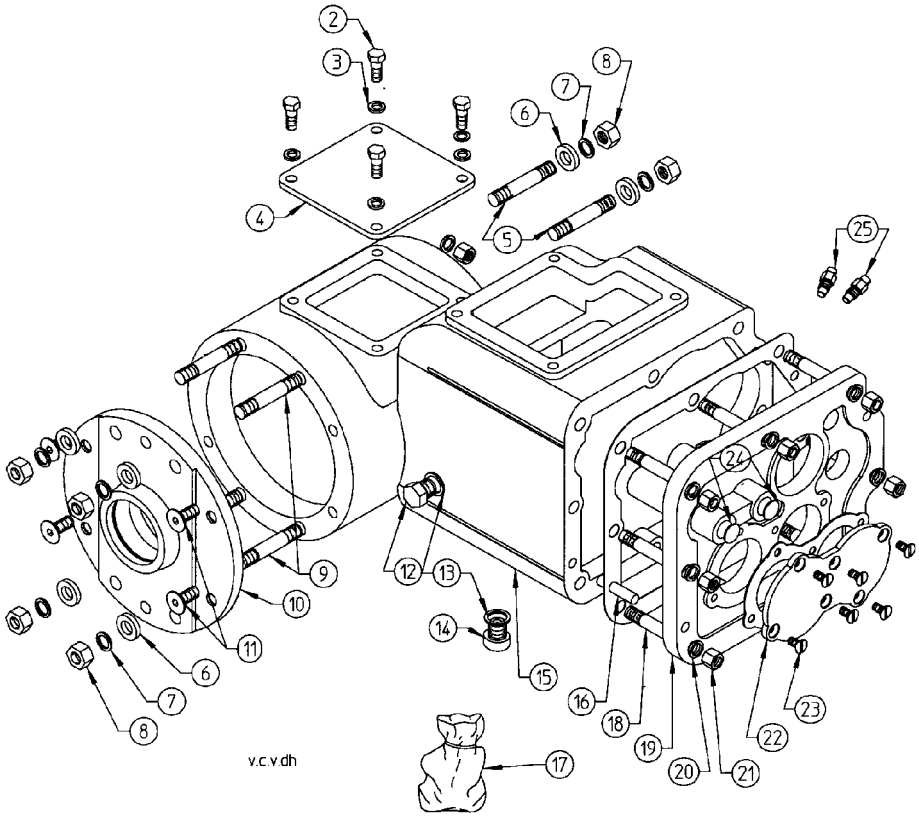

Transmisión
Transmission
Transmission
Antrieb

Caja de cambios (internos)
Boite a vitesses (interieur)
Gearbox (internal)
Innerschaltkasten

A partir del nºbastidor:
From chassis nr.:
(1) 092.39445

Fig. Nº *Fig. Nº* *Fig. Nº* *Bild Nr.*	Referencia *Reference* *Part Nº* *Teil Nr.*	Cantidad *Quantité* *Quantity* *Quantität*	
1	01.30000.02	1	(1)
2	320.30016.00	1	
3	914.62000.00	1	
4	904.30000.00	2	
5	01.00356.00	1	
6	01.00357.00	1	
7	01.00386.00	1	
8	01.03912.00	1	
9	328.20015.00	1	
10	01.00394.02	1	
11	01.00393.01	1	
12	02.00013.01	1	
13	904.20000.00	3	
14	306.20015.00	2	
15	905.52.000.00	3	
16	01.00319.00	2	
17	01.00316.00	1	
18	01.00314.00	2	
19	09.99007.00	1	
20	01.00355.00	1	

Fig. Nº *Fig. Nº* *Fig. Nº* *Bild Nr.*	Referencia *Reference* *Part Nº* *Teil Nr.*	Cantidad *Quantité* *Quantity* *Quantität*
21	910.35348.00	20
22	01.00369.00	2
23	01.00362.00	1
24	09.99007.00	*
25	301.20015.00	1
26	09.99007.00	*
27	02.00358.00	1
28	301.30016.00	1
29	01.00313.00	1
30	01.00353.01	1
31	01.00317.00	1
32	15.00315.00	1
32	00.03128.00	1
33	908.08000.66	3
34	09.99007.00	1
35	01.00315.00	1
36	01.00320.00	1
37	09.99007.00	1
38	905.62000.00	1

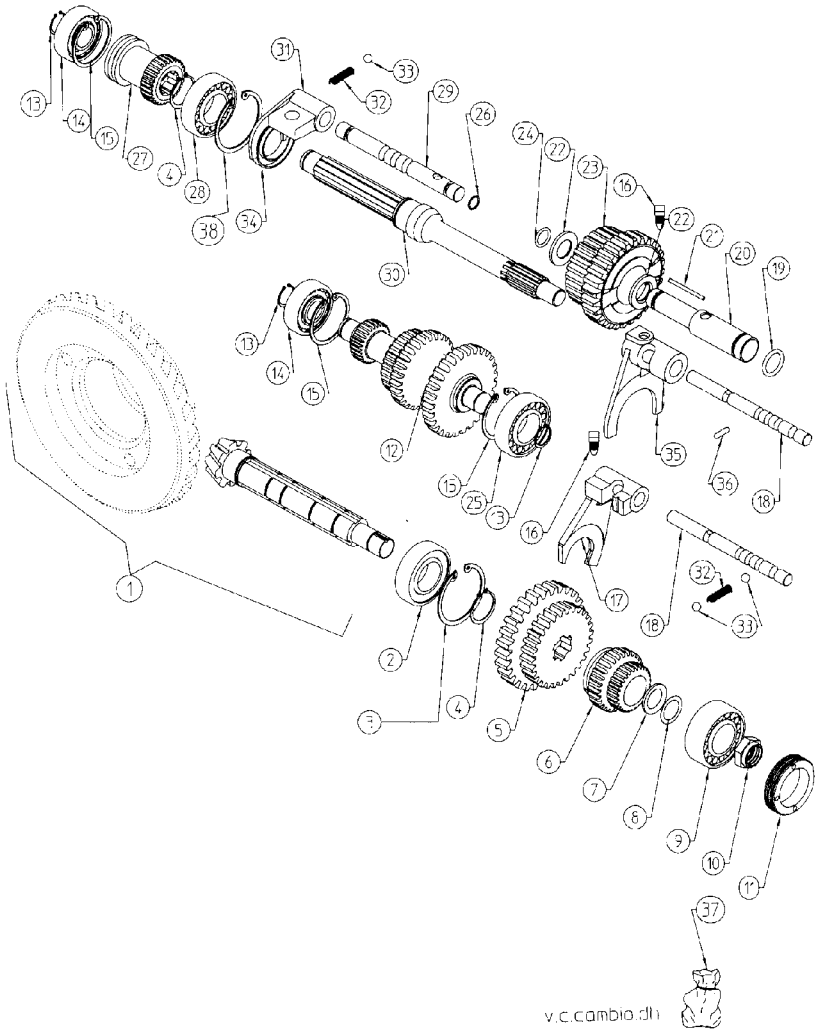

Transmisión
Transmission
Transmission
Antrieb

Diferencial
Differentiel
Differential
Differential

A partir del nºbastidor:
From chassis nr.:

(1) 396.27686

Fig. Nº *Fig. Nº* *Fig. Nº* *Bild Nr.*	Referencia *Reference* *Part Nº* *Teil Nr.*	Cantidad *Quantité* *Quantity* *Quantität*	Fig. Nº *Fig. Nº* *Fig. Nº* *Bild Nr.*	Referencia *Reference* *Part Nº* *Teil Nr.*	Cantidad *Quantité* *Quantity* *Quantität*
1	01.03000.00	1	9	301.40018.00	2
2	01.00387.00	4	10	301.25015.00	2
3	01.00388.00	1	11	905.52000.00	2
4	00.00382.02	2	12	09.99007.00	1
5	01.03010.02	1	13	02.00385.02	2
6	01.00301.02	1	14	904.25000.00	2
7	01.30000.00	1	15	711.08000.66	8 (1)
8	01.03902.00	0,2	16	01.00389.00	4
8	01.03903.00	0,3	17	01.00380.00	8

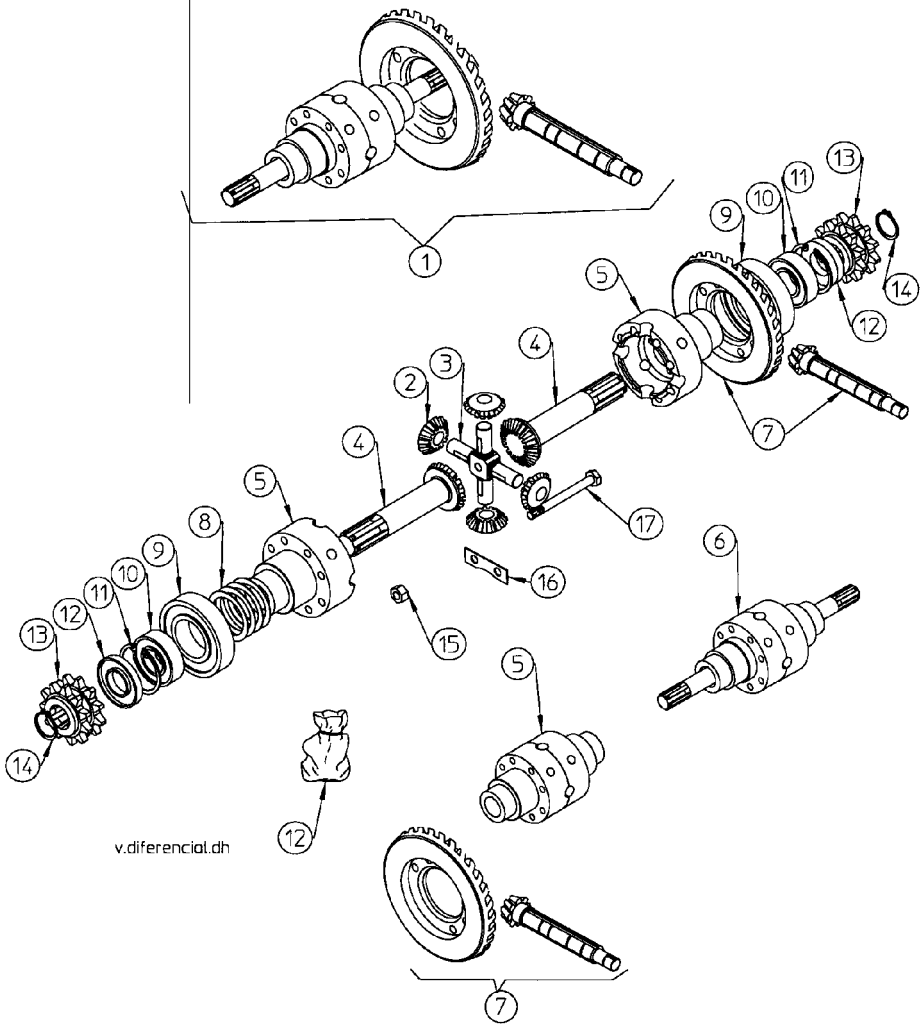

Transmisión
Transmission
Transmission
Antrieb

Palancas mandos cambio
Leviers boite vitesses
Shift gear levers
Gansgschaltungssteurungen

(1) a partir del nºbastidor:
From chassis nr.:
092.33917

Fig. Nº *Fig. Nº* *Fig. Nº* *Bild Nr.*	Referencia *Reference* *Part Nº* *Teil Nr.*	Cantidad *Quantité* *Quantity* *Quantität*	
1	01.00325.02	1	
2	02.40323.01	1	
3	02.41323.00	1	
4	01.00309.00	2	
5	01.00308.00	2	
6	01.00325.03	1	
7	01.00324.06	1	
8	711.08000.66	3	
9	08.30321.00	1	
10	00.02803.00	1	
11	107.14000.10	1	
12	00.00326.00	2	
13	603.08025.86	4	
14	104.08000.66	4	
15	40.30310.10	1	(1)
*15A	40.30310.03	1	(1)
16	104.09000.66	1	
17	701.09000.66	1	
18	01.00312.01	1	
19	01.00326.00	2	
20	905.45000.00	2	
21	46.00322.01	1	
22	40.00005.00	1	
*22	40.00005.10	1	

* 4x4

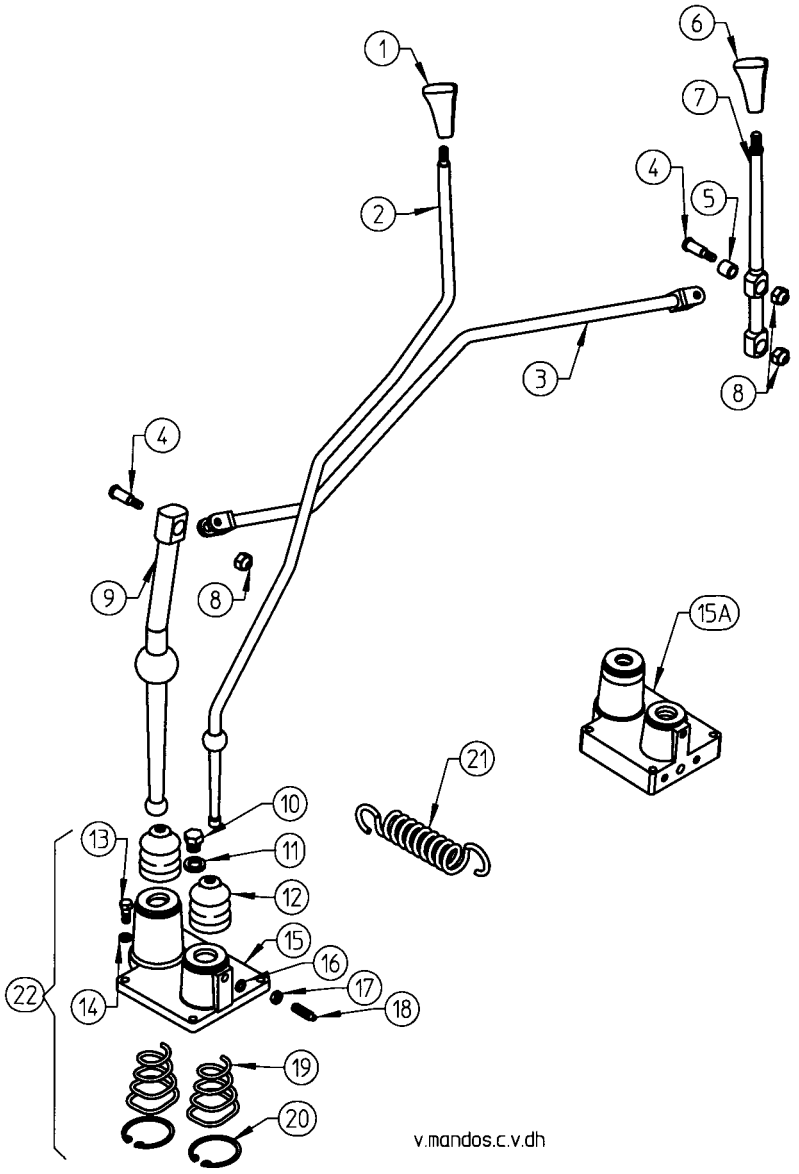

Transmisión
Transmission
Transmission
Antrieb

Puente delantero
Pont avant
Front axle
Vorderachse

Fig. Nº *Fig. Nº* *Fig. Nº* *Bild Nr.*	Referencia *Reference* *Part Nº* *Teil Nr.*	Cantidad *Quantité* *Quantity* *Quantität*
1	02.00400.01	2
2	01.00432.00	2
3	09.00426.00	2
4	01.01319.00	2
5	101.30000.66	2
6	202.45008.50	2
7	43.08034.00	12
8	104.08000.66	12
9	701.08000.66	12
10	401.25030.60	2
11	01.01312.00	2
12	104.06000.66	4
13	901.08000.33	2
14	603.06015.86	4
15	101.14000.66	4
16	701.08000.66	6
17	104.08000.66	6
18	101.08000.66	6
19	00.01307.02	6
20	00.00420.00	2
21	603.09030.86	2
22	00.00430.00	2
23	00.00427.00	2
24	00.00412.00	14
25	104.09000.66	16

Fig. Nº *Fig. Nº* *Fig. Nº* *Bild Nr.*	Referencia *Reference* *Part Nº* *Teil Nr.*	Cantidad *Quantité* *Quantity* *Quantität*
26	01.01303.00	16
27	603.10080.86	1
28	00.00422.00	1
29	01.00425.00	1
30	02.00411.00	1
31	905.80000.00	2
32	306.40018.00	4
33	02.00415.00	2
34	301.45019.00	2
35	00.00402.01	2
36	02.00519.01	2
37	02.00414.99	2
38	02.00417.00	2
39	02.00419.00	2
40	02.00518.00	2
40	02.00518.04	2
41	00.00587.00	10
42	00.00588.00	10
43	401.04050.60	2
44	01.01305.00	8
45	00.00184.00	4
46	01.00182.00	2
47	02.00183.00	2

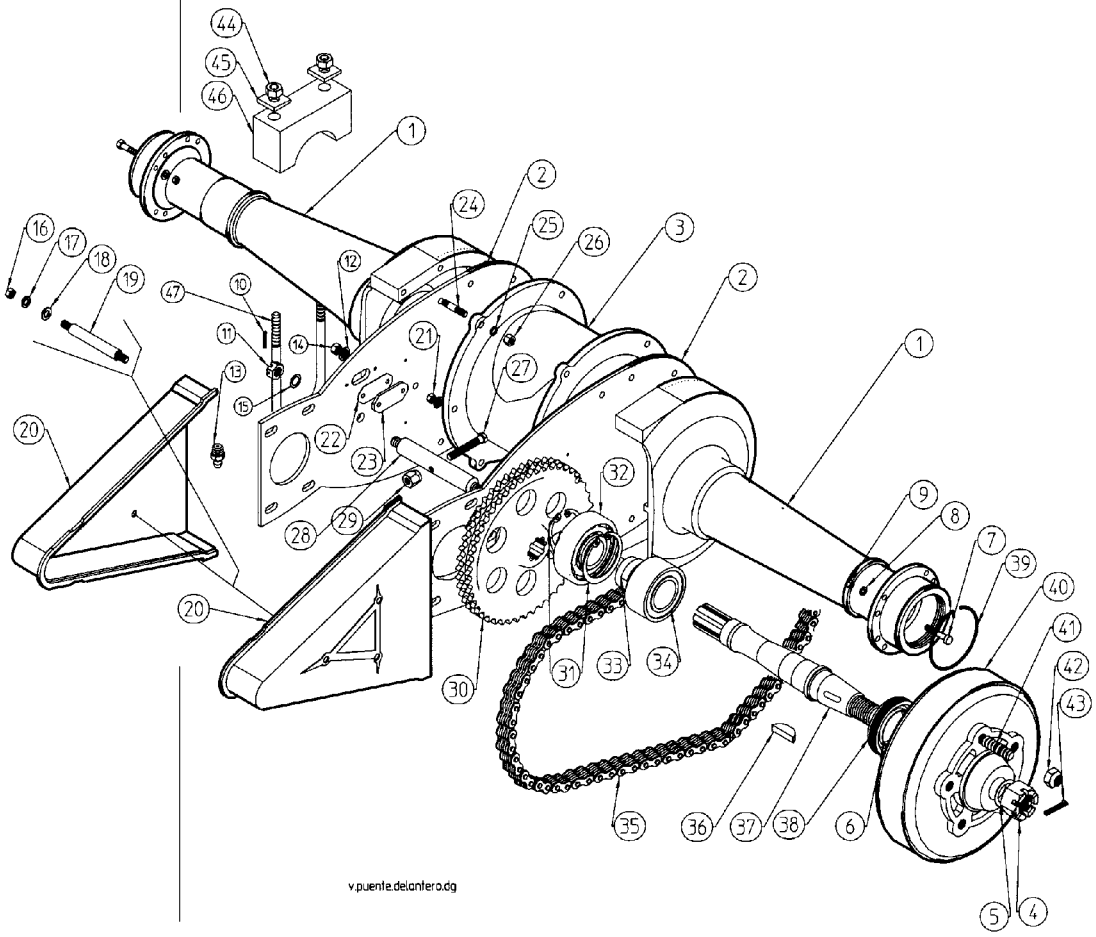

Transmisión
Transmission
Transmission
Antrieb

Frenos hidráulicos
Freins hidrauliques
Hydraulic brakes
Hydraulische Bremsen

Tabla a partir del nºbastidor:
List from chassis nr.:

(1) 396.27686

Fig. Nº *Fig. Nº* *Fig. Nº* *Bild Nr.*	Referencia *Reference* *Part Nº* *Teil Nr.*	Cantidad *Quantité* *Quantity* *Quantität*
1	45.00408.01	1 DE
1	45.00407.01	1 IZ
2	45.00408.34	2
3	45.00408.20	2 IZ
3	45.00407.20	2 DE
4	45.00408.46	2
5	45.00408.26	1 DE
5	45.00407.26	1 IZ
6	45.00408.29	2
7	45.00408.44	4
8	45.00408.45	2
9	45.00408.58	4
10	45.00408.59	4
11	45.00408.60	2
12	45.00408.61	2
13	603.08010.86	4
14	43.00706.01	2

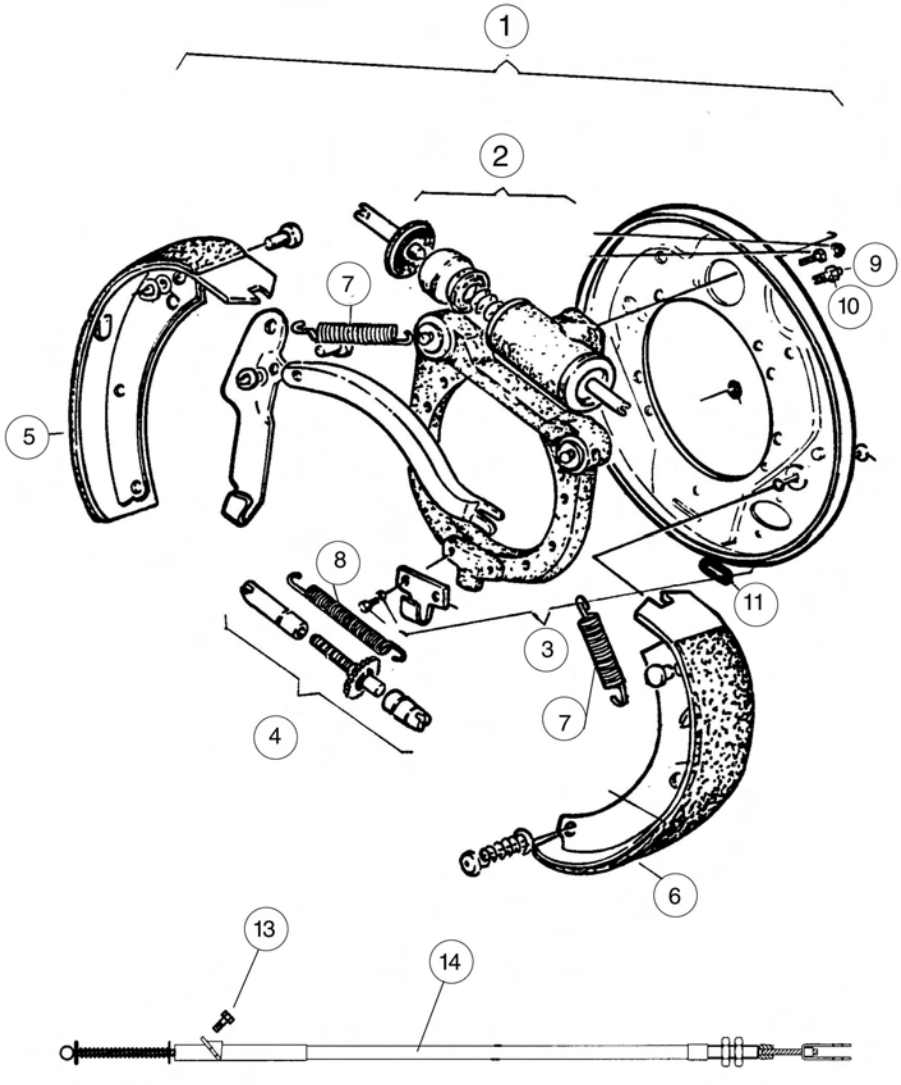

Transmisión
Transmission
Transmission
Antrieb

Puente directriz
Essieu directeur
Rear axle
Leitbrücke

Fig. Nº *Fig. Nº* *Fig. Nº* *Bild Nr.*	Referencia *Reference* *Part Nº* *Teil Nr.*	Cantidad *Quantité* *Quantity* *Quantität*
1	01.00500.04	1
2	02.00600.04	1
3	01.00625.00	2
4	01.00629.00	1
5	01.00628.00	3
6	901.08000.33	2
7	01.00623.00	2
8	01.00634.00	4
9	01.00633.00	2
10	710.14000.66	2
11	401.25030.60	6
12	01.01314.00	2
13	01.00632.00	2
14	01.00639.03	1
15	01.00639.02	1
16	202.30008.50	1

Fig. Nº *Fig. Nº* *Fig. Nº* *Bild Nr.*	Referencia *Reference* *Part Nº* *Teil Nr.*	Cantidad *Quantité* *Quantity* *Quantität*
17	01.00553.01	2
18	307.25016.00	2
19	01.00552.02	2
20	307.20015.00	2
21	01.00561.00	2
22	01.00550.08	2
23	01.00557.08	6
23	01.00557.00	6
24	101.16000.66	2
25	00.05806.00	2
26	01.00549.08	6
26	01.00549.00	6
27	01.00627.02	6
28	718.18000.66	1
29	902.08000.33	2
30	01.00037.01	2

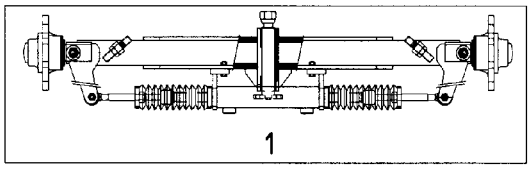

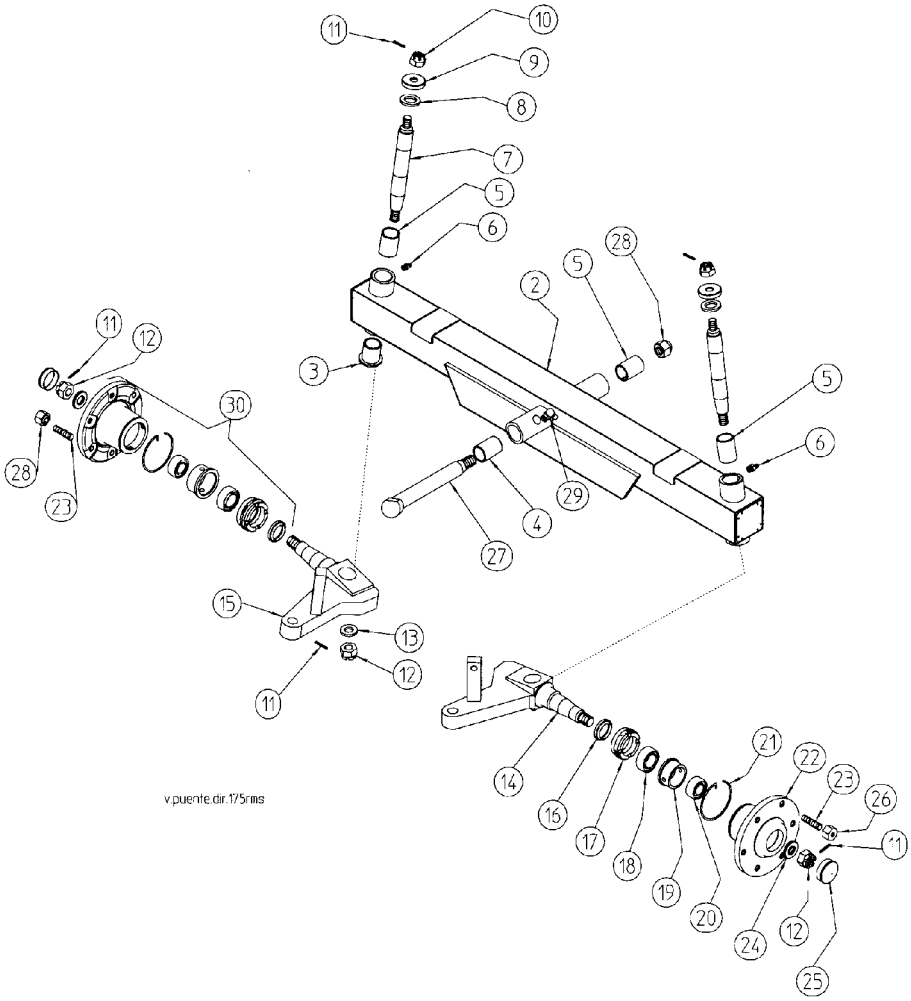

Transmisión
Transmission
Transmission
Antrieb

Cilindro dirección
Essieu directeur
Steering cylinder
Lenkungszylinder

Fig. Nº *Fig. Nº* *Fig. Nº* *Bild Nr.*	Referencia *Reference* *Part Nº* *Teil Nr.*	Cantidad *Quantité* *Quantity* *Quantität*
1	01.00617.11	1 KIT
2	10.09100.00	2
3	01.61720.00	2
4	912.32050.66	2
5	45.01492.00	2
6	01.00617.10	1 KIT
7	01.06175.00	1
8	01.06176.00	1

Fig. Nº *Fig. Nº* *Fig. Nº* *Bild Nr.*	Referencia *Reference* *Part Nº* *Teil Nr.*	Cantidad *Quantité* *Quantity* *Quantität*
9	01.06172.00	2
10	01.06171.00	1
11	01.06173.00	1
12	207.04032.50	1
13	201.03335.50	2
14	229.02228.50	2
15	228.02230.50	2
16	603.08030.86	2
17	11.99130.01	1

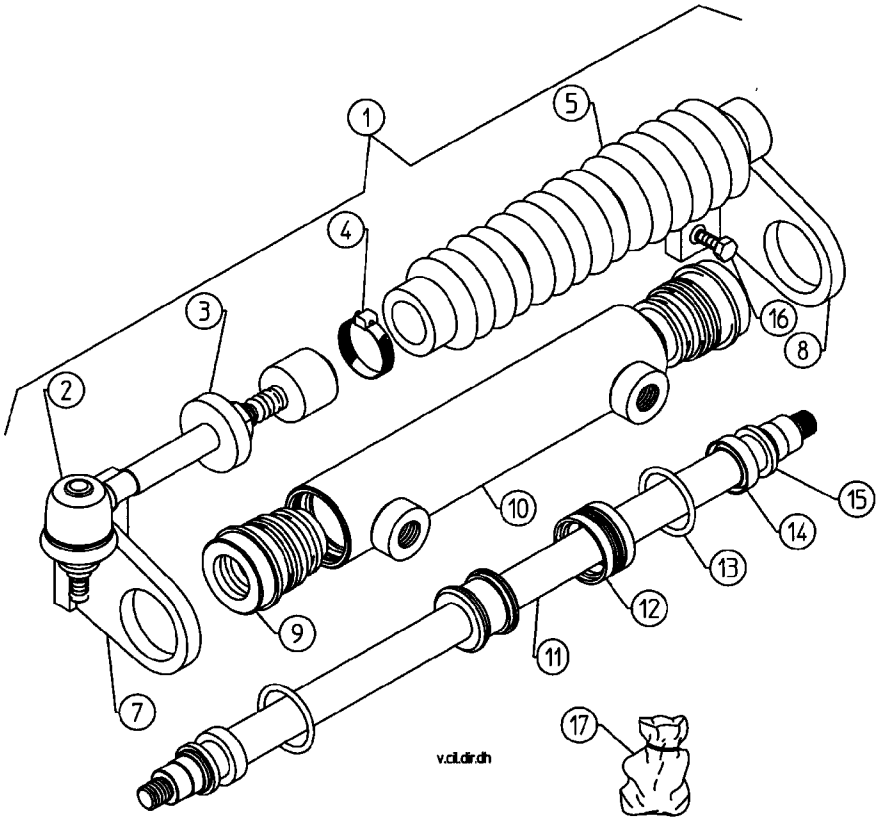

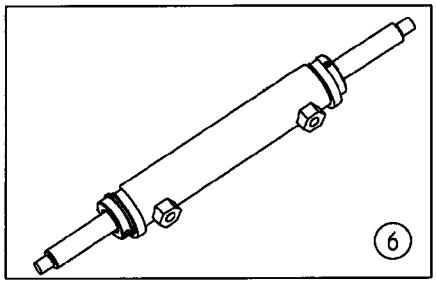

Acelerador
Accelerateur
Accelerator
Gas

Acelerador
Accelerateur
Accelerator
Gashebel

Fig. Nº *Fig. Nº* *Fig. Nº* *Bild Nr.*	Referencia *Reference* *Part Nº* *Teil Nr.*	Cantidad *Quantité* *Quantity* *Quantität*
1	09.00123.00	1 *
1	37.01123.02	1 **
2	01.00138.00	2
3	15.00124.01	1
4	630.06015.86	3
5	104.06000.66	3
6	701.06000.66	3
7	09.02091.00	1 *
7	45.00139.00	1 **
8	01.01470.00	1 KIT**
9	43.00727.00	1
10	701.06000.66	1 *
11	01.00133.00	1 *

Fig. Nº *Fig. Nº* *Fig. Nº* *Bild Nr.*	Referencia *Reference* *Part Nº* *Teil Nr.*	Cantidad *Quantité* *Quantity* *Quantität*
12	01.00138.00	1 *
13	01.00514.01	1 **
14	09.06150.00	1 *
15	401.02025.60	2 *
16	101.08000.66	1 *
17	40.00148.00	1 **
18	43.03150.00	1 **
19	54.59180.00	1 **
20	45.04113.00	1 **
21	01.00124.00	1 **
22	47.00148.02	1 kit
23	603.06015.86	1 *
24	711.06000.66	1 *
25	201.00218.50	1 *
26	39.02514.00	1 *
27	39.02041.00	1 *

*PERKINS
**HATZ

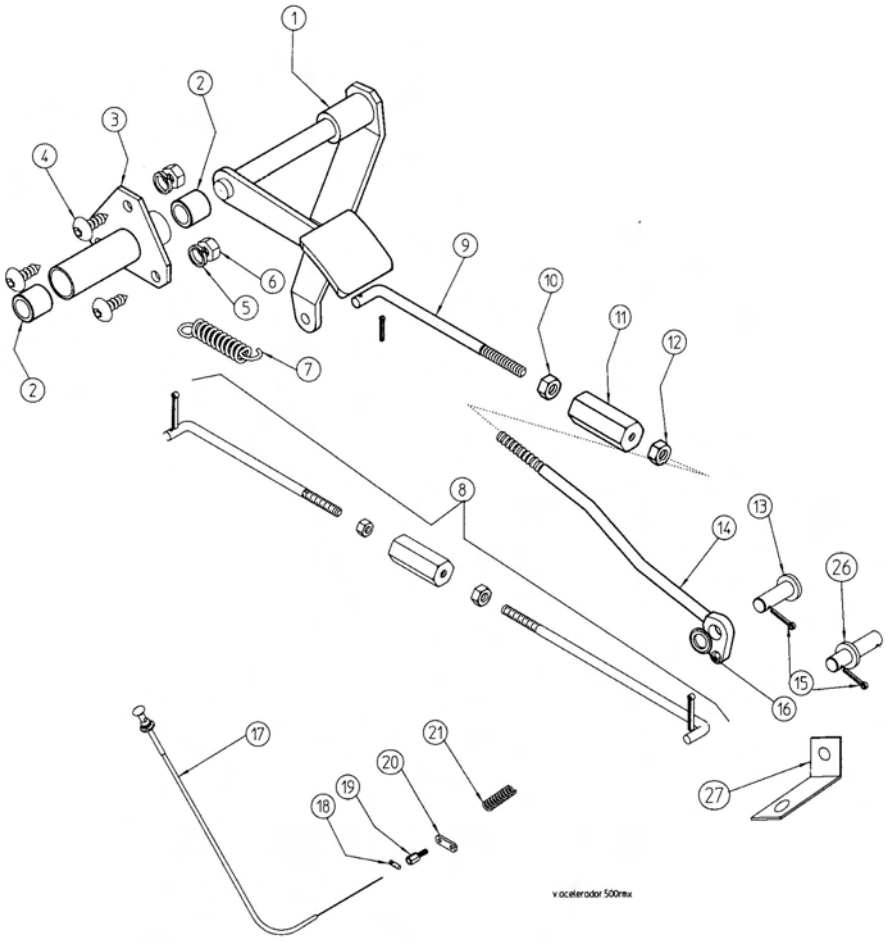

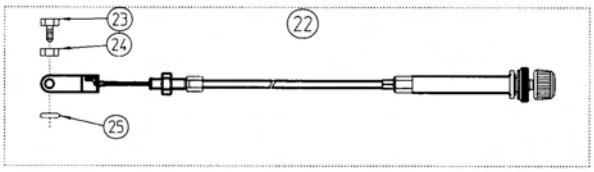

Bastidor
Chassis
Chassis
Fahrgestell

Bastidor
Chassis
Chassis
Fahrgestell

Tabla a partir del nºbastidor:
List from chassis nr.:
(1) 934.37160

Fig. Nº *Fig. Nº* *Fig. Nº* *Bild Nr.*	Referencia *Reference* *Part Nº* *Teil Nr.*	Cantidad *Quantité* *Quantity* *Quantität*	
1	601.08025.86	1	
~~2~~	~~09.12106.00~~	~~4~~	(1)
3	09.12107.02	2	(1)
4	901.08000.33	2	
5	09.12125.00	2	
6	08.00527.00	4	
7	09.00705.43	1	
8	101.30000.66	2	
9	904.30000.00	2	

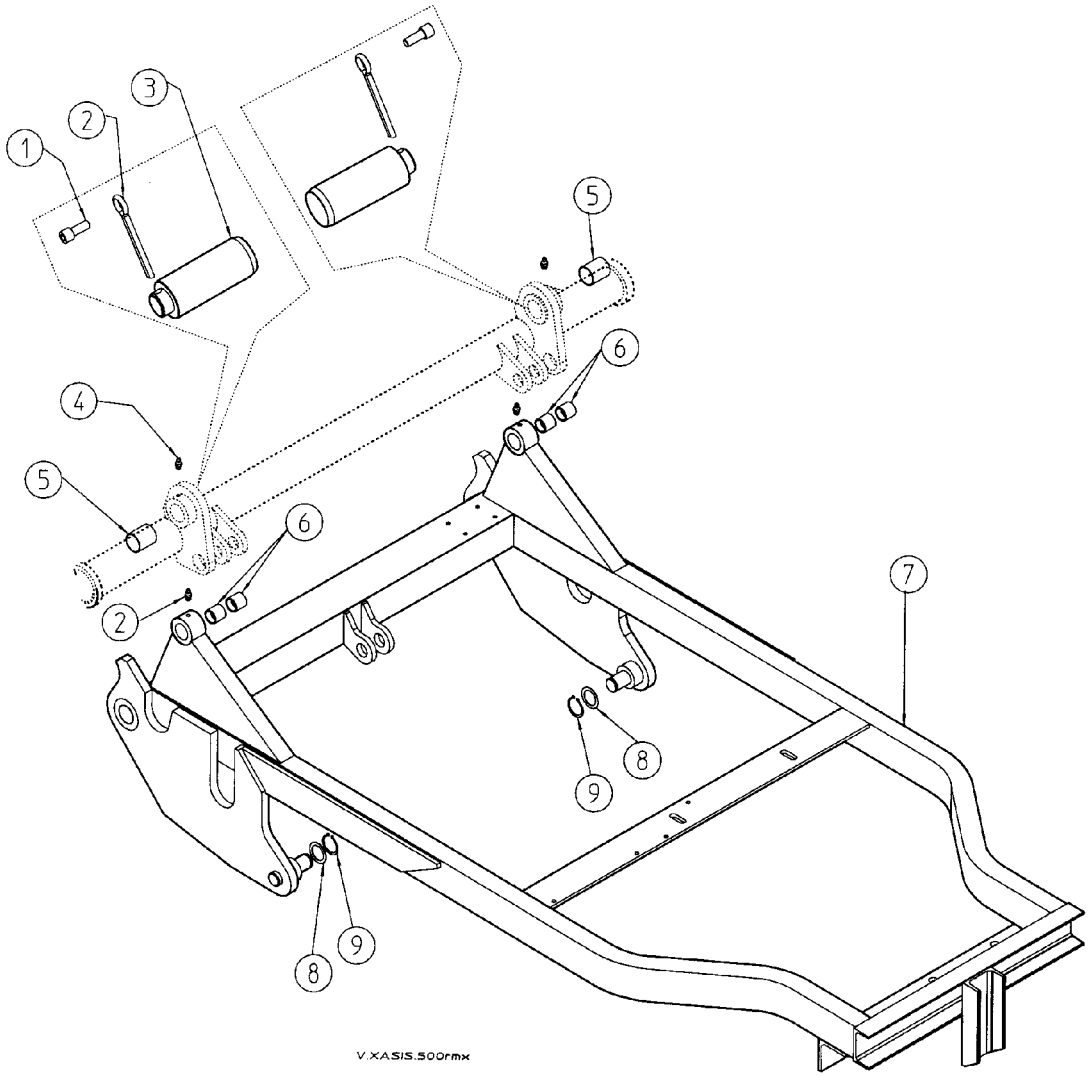

Bastidor
Chassis
Chassis
Fahrgestell

Cilindro
Cylindre
Cylinder
Zylinder

Fig. Nº *Fig. Nº* *Fig. Nº* *Bild Nr.*	Referencia *Reference* *Part Nº* *Teil Nr.*	Cantidad *Quantité* *Quantity* *Quantität*
1	09.12101.01	(2)
2	09.00215.01	1
3	19.00220.03	1
4	19.00221.01	1
5	718.16000.66	1
6	09.01510.01	2
7	55.00527.00	1
8	55.99200.01	1
9	228.02836.50	1
10	229.02838.50	1
11	201.04705.50	1
12	201.01725.50	1
13	207.05543.50	1
14	901.08000.66	4
15	15.01216.00	2
16	15.00832.00	2
17	104.09000.66	4
18	603.06015.86	4

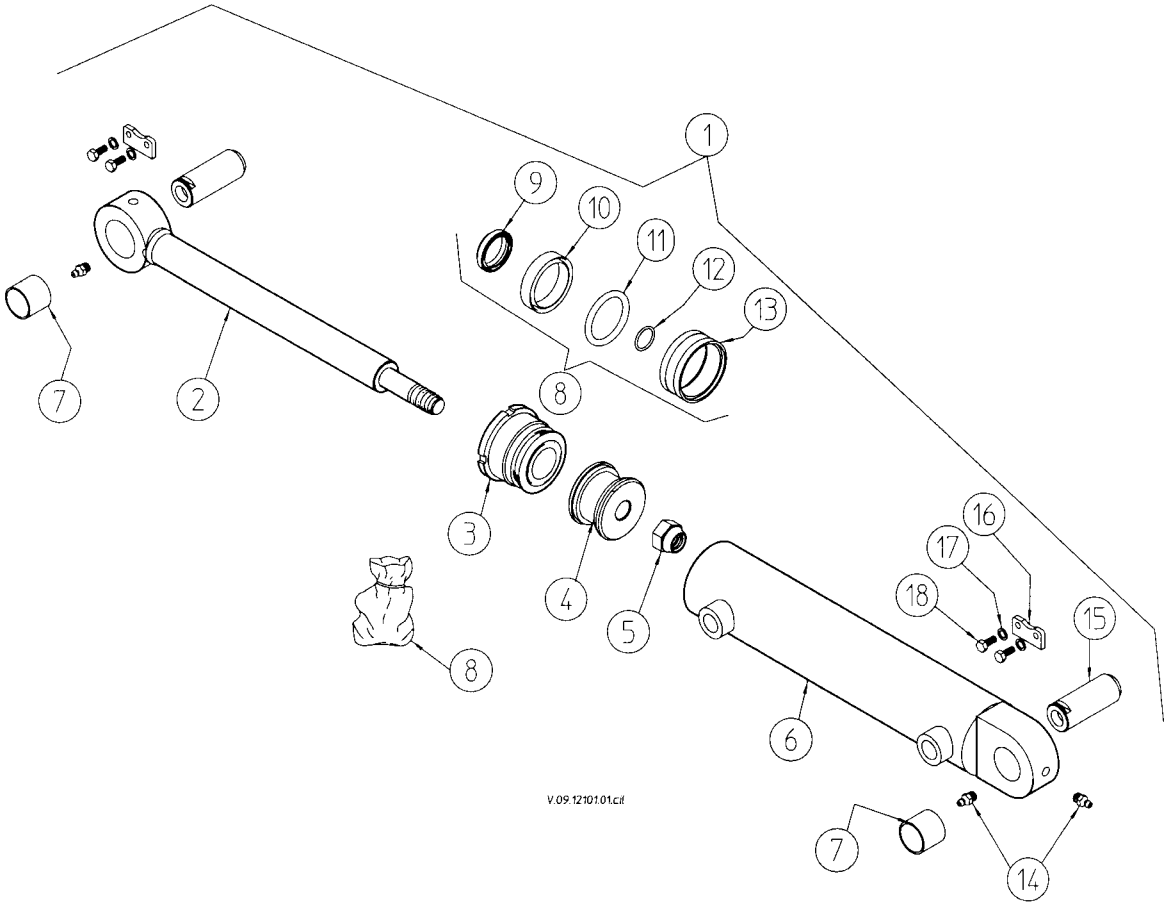

Bastidor
Chassis
Chassis
Fahrgestell

Brazo pala
Bras pelle
shovel arm
Schaufelarm

Fig. Nº *Fig. Nº* *Fig. Nº* *Bild Nr.*	Referencia *Reference* *Part Nº* *Teil Nr.*	Cantidad *Quantité* *Quantity* *Quantität*
1	09.12501.00	1
2	09.55123.00	1
3	09.55127.00	1

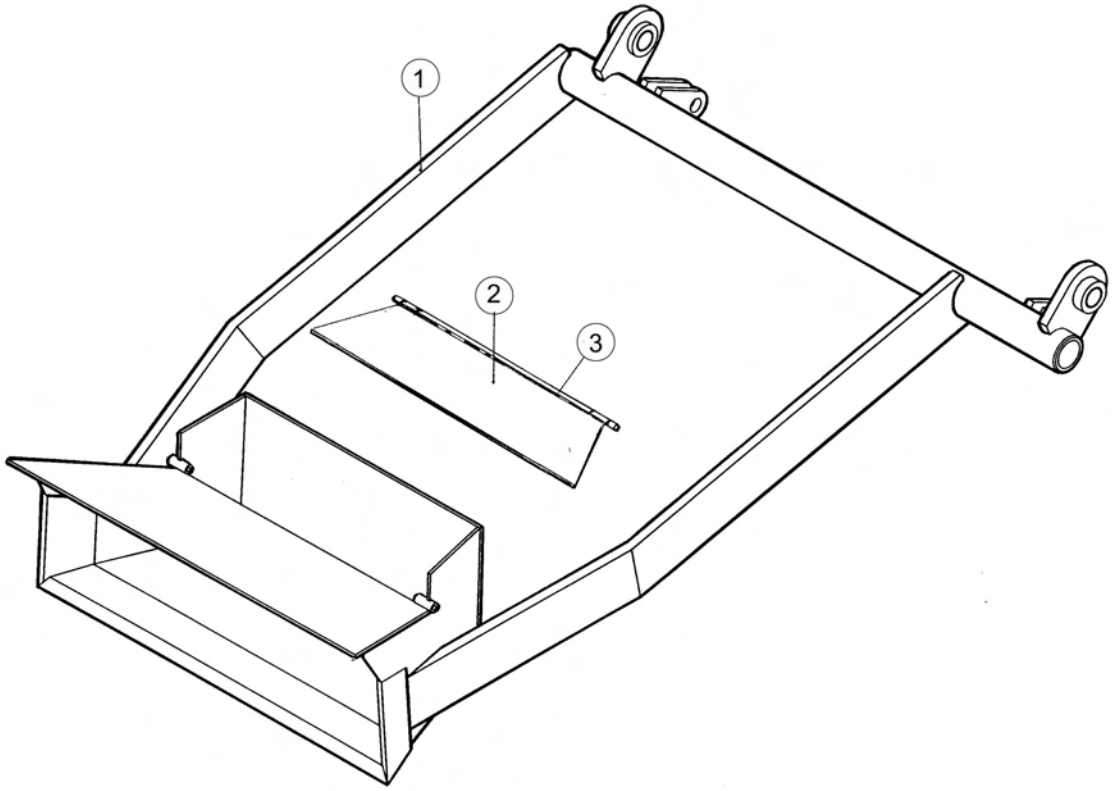

Opciones y variantes

Options et variantes

Option and variants

Möglichkeiten und Varianten

Pala y tolva
Pelle et benne
Shovel and skip
Schaufel und mulde

Fig. Nº *Fig. Nº* *Fig. Nº* *Bild Nr.*	Referencia *Reference* *Part Nº* *Teil Nr.*	Cantidad *Quantité* *Quantity* *Quantität*
1	09.12400.00	1
2	09.00716.01	1
3	09.00135.00	2
4	603.06015.86	4

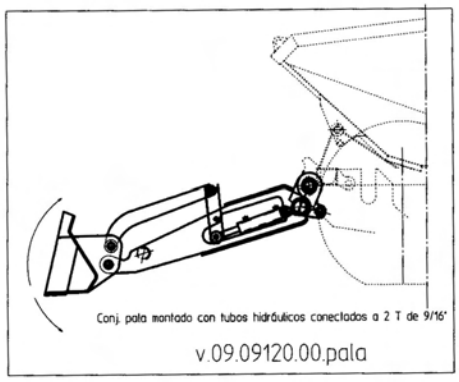

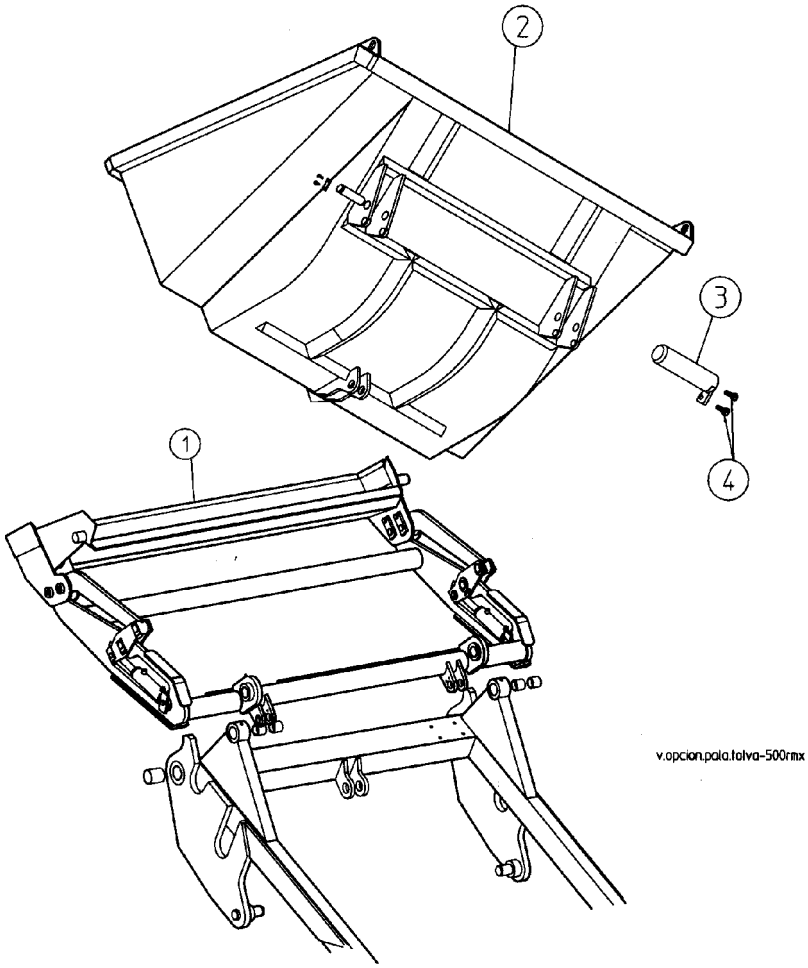

Embrague
Embrayage
Clutch
Kupplung

Pedales
Pedales
Pedals
Pedalwerk

Fig. Nº *Fig. Nº* *Fig. Nº* *Bild Nr.*	Referencia *Reference* *Part Nº* *Teil Nr.*	Cantidad *Quantité* *Quantity* *Quantität*
1	43.07310.01	2
2	10.00215.01	1
3	10.00519.04	1
4	923.16030.00	2
5	01.00223.00	1
6	901.08000.33	4
7	402.06030.00	1
8	402.35030.00	1
9	10.00214.01	1
10	01.00216.00	3

Fig. Nº *Fig. Nº* *Fig. Nº* *Bild Nr.*	Referencia *Reference* *Part Nº* *Teil Nr.*	Cantidad *Quantité* *Quantity* *Quantität*
11	104.08000.66	6
12	603.08020.86	6
13	01.00212.01	1
14	401.02020.60	2
15	101.07000.86	2
16	701.07000.86	1
17	00.00329.01	1
18	01.00226.00	1
19	701.10000.66	1
20	604.10035.86	1

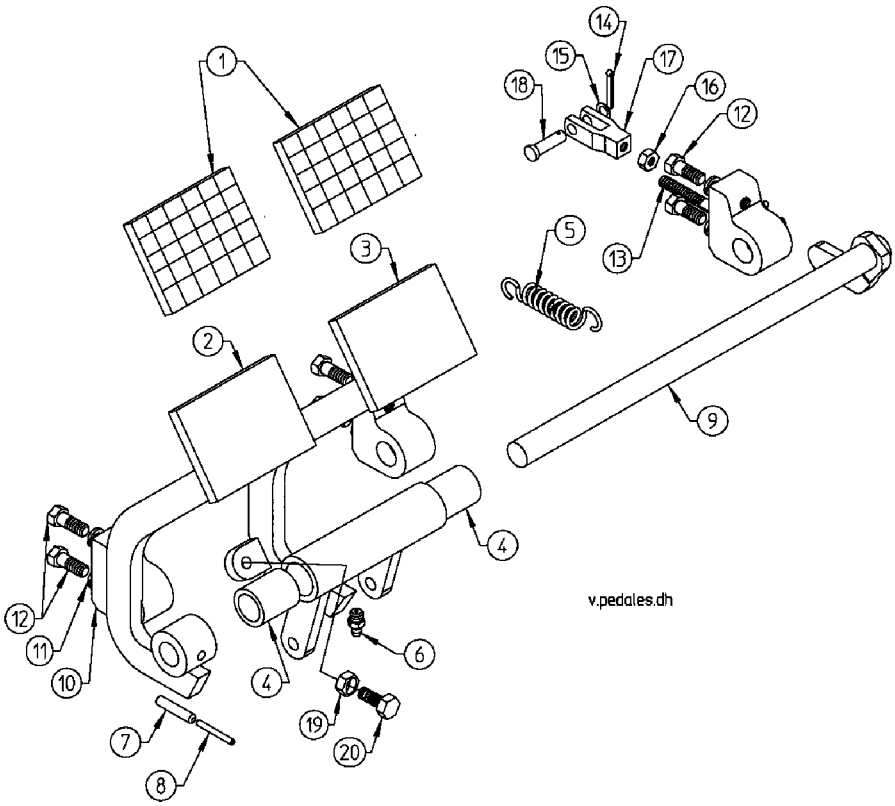

Freno
Frein
Brake
Bremse

Instalación frenos hidráulico
Installation freins hydraulique
Hydraulic Brake Installation
Bremskreistauf Hydraulik

Fig. Nº *Fig. Nº* *Fig. Nº* *Bild Nr.*	Referencia *Reference* *Part Nº* *Teil Nr.*	Cantidad *Quantité* *Quantity* *Quantität*
1	43.00751.00	1
2	43.07511.00	1
3	01.00223.01	1
4	10.00519.04	1
5	01.00514.01	1
6	01.00564.02	1
7	401.02020.60	1
8	101.08000.66	1
9	09.00774.01	1
10	912.08000.66	2

Fig. Nº *Fig. Nº* *Fig. Nº* *Bild Nr.*	Referencia *Reference* *Part Nº* *Teil Nr.*	Cantidad *Quantité* *Quantity* *Quantität*
11	31.01065.00	1
12	46.00747.20	1
13	31.01064.00	1
14	43.01521.00	1
15	09.00773.01	1
16	43.00750.06	1
17	43.07512.00	1
18	01.01304.00	1
19	929.05000.00	7

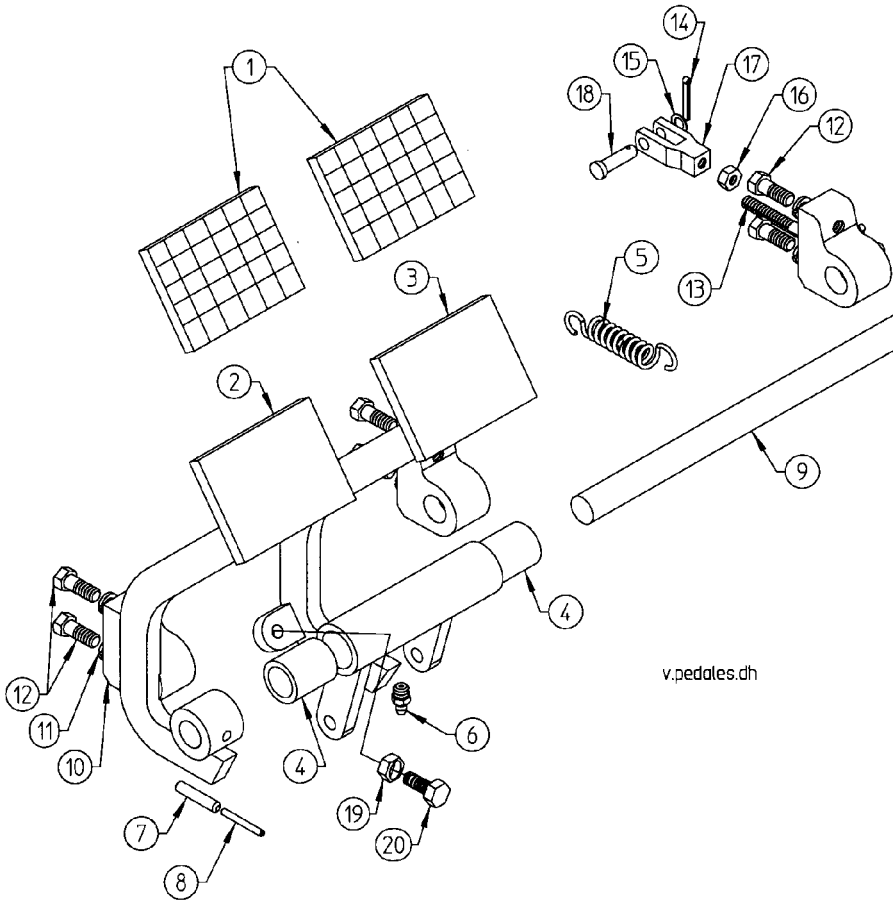

Freno
Frein
Brake
Bremse

Bomba de frenos
Pompe de freins
Brake pump
Bremspumpe

Fig. Nº *Fig. Nº* *Fig. Nº* *Bild Nr.*	Referencia *Reference* *Part Nº* *Teil Nr.*	Cantidad *Quantité* *Quantity* *Quantität*
1	46.00747.20	1
2	43.00747.25	1
3	43.00747.34	1
4	15.07780.00	1
5	43.00747.90	1

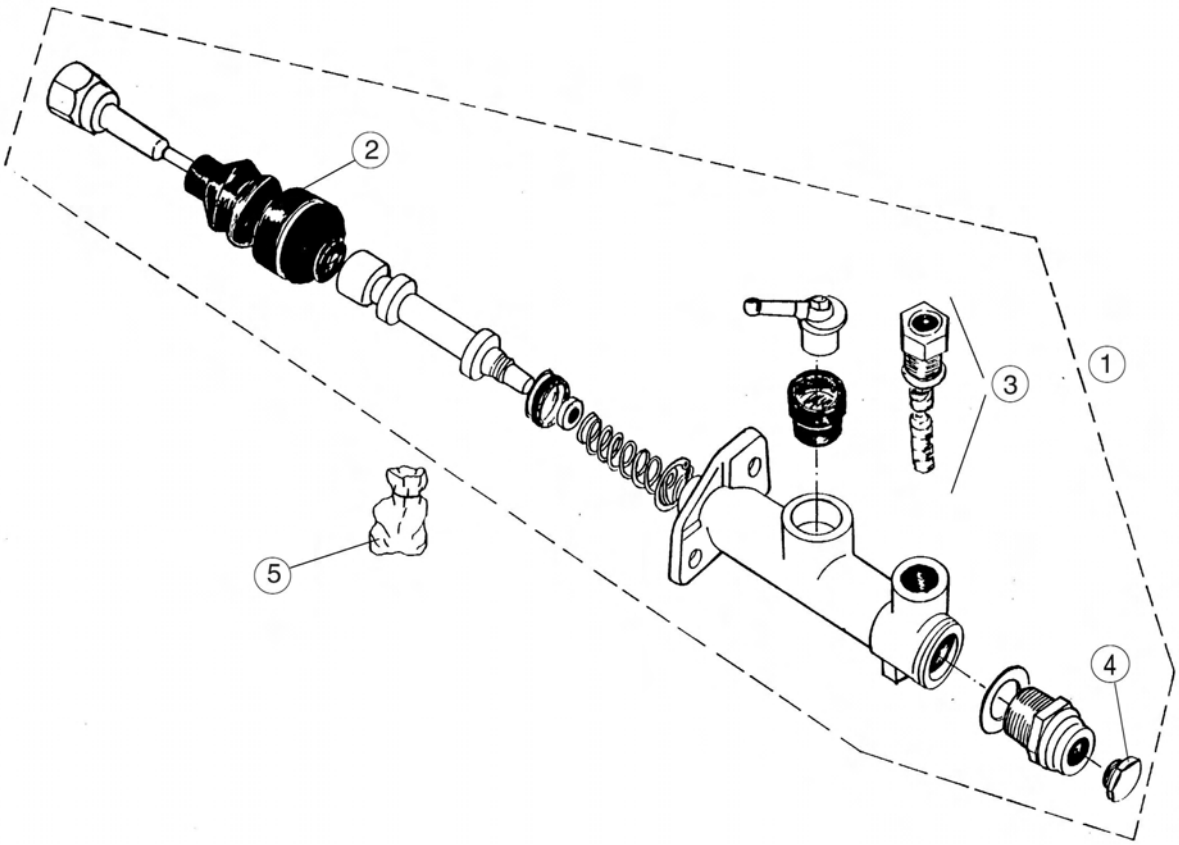

Freno
Frein
Brake
Bremse

Freno estacionamiento
Frein de stationnement
Parking Brake
Feststellbremse

Fig. Nº *Fig. Nº* *Fig. Nº* *Bild Nr.*	Referencia *Reference* *Part Nº* *Teil Nr.*	Cantidad *Quantité* *Quantity* *Quantität*
1	10.00519.04	1
2	603.08015.86	3
3	101.08000.66	5
4	01.00514.02	1
5	401.02025.60	1
6	02.08102.00	1
7	43.00755.11	1
8	604.08040.86	2
9	43.07550.01	1
10	604.08070.86	2
11	43.00755.01	1
12	630.08020.96	4
13	104.08000.66	4
14	701.08000.66	4
15	02.50551.00	2
16	37.00157.03	1

Fig. Nº *Fig. Nº* *Fig. Nº* *Bild Nr.*	Referencia *Reference* *Part Nº* *Teil Nr.*	Cantidad *Quantité* *Quantity* *Quantität*
17	37.00157.12	1 (1)
18	01.00514.01	3
19	43.00766.00	1
20	401.02020.60	3
21	43.00706.01	1
22	44.00706.02	1
23	603.08020.86	6
24	701.08000.60	6
25	43.00708.00	2

* Izquierdo/gauche/left/linke
** Derecho/droite/right/rechte

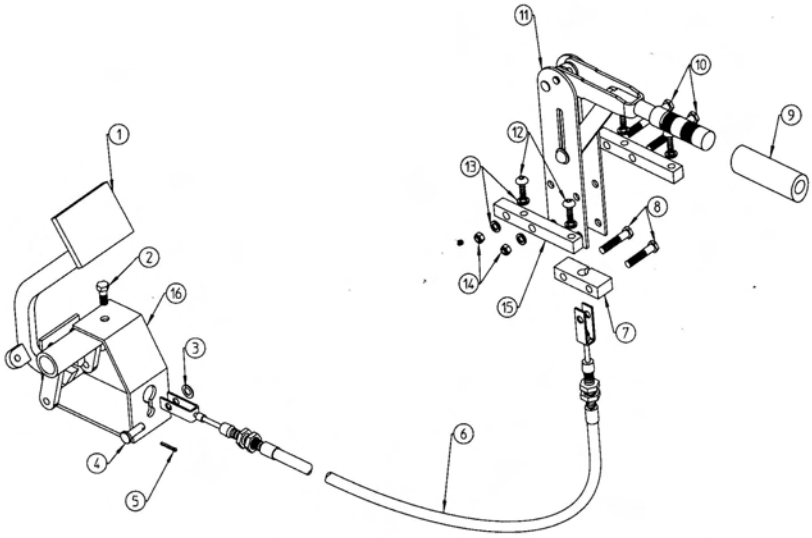

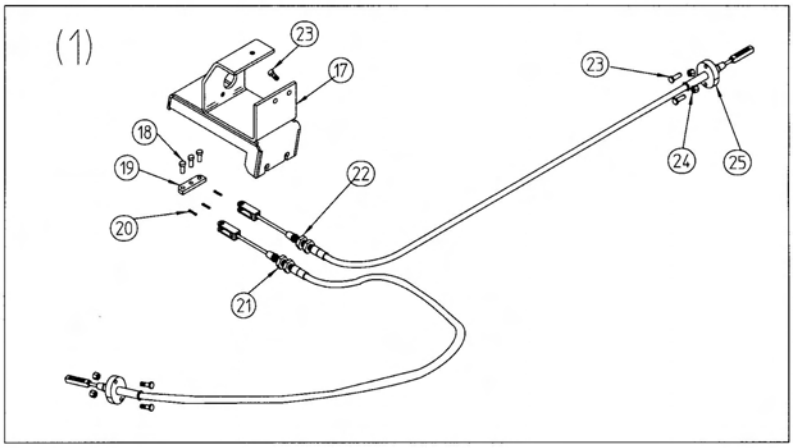

v.freno.esta.h.dh

Dirección
Direction
Steering
Lenkung

Dirección hidráulica
Direction hydraulique
Hydraulic Steering
Hydraulische Lenkung

Fig. Nº *Fig. Nº* *Fig. Nº* *Bild Nr.*	Referencia *Reference* *Part Nº* *Teil Nr.*	Cantidad *Quantité* *Quantity* *Quantität*
1	09.00608.01	1
2	09.10680.00	1
3	09.06130.00	1
4	104.10000.66	4
5	630.10030.96	4
6	104.16000.66	1
7	00.00626.03	1
8	15.01016.01	1
9	15.10160.01	1

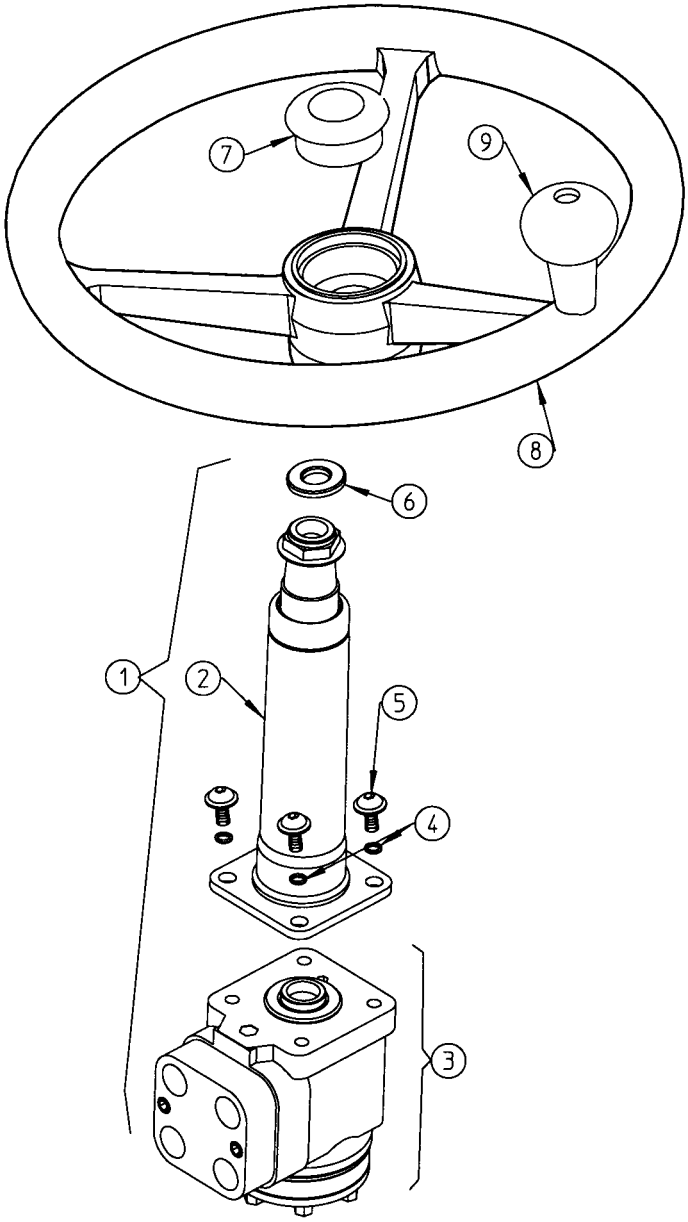

v.direc.hi.dh

Ruedas
Roues
Wheel
Räder

Ruedas delanteras
Roues avant
Front Wheels
Vorderäder

Fig. Nº *Fig. Nº* *Fig. Nº* *Bild Nr.*	Referencia *Reference* *Part Nº* *Teil Nr.*	Cantidad *Quantité* *Quantity* *Quantität*
5	02.00501.00	1
6	02.00580.00	2
7	02.00590.00	2
8	02.00581.00	2

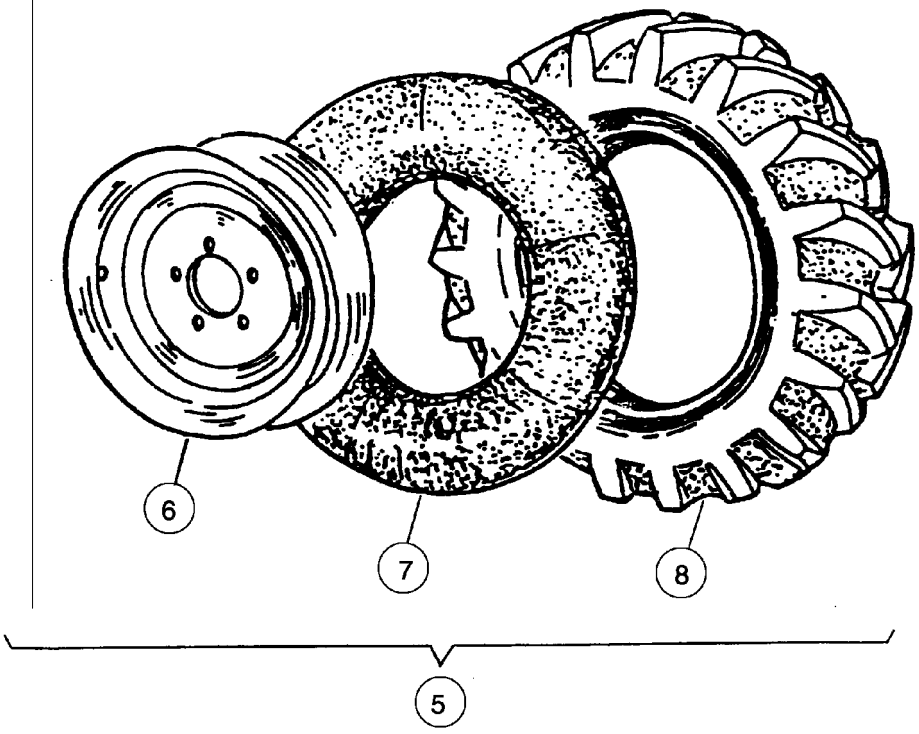

Ruedas
Roues
Wheel
Räder

Ruedas traseras
Roues arrière
Rear Wheels
Hinteräder

Fig. Nº *Fig. Nº* *Fig. Nº* *Bild Nr.*	Referencia *Reference* *Part Nº* *Teil Nr.*	Cantidad *Quantité* *Quantity* *Quantität*
1	01.00502.00	1
2	00.05016.08	2
3	01.00555.08	2
4	01.00585.08	2
Opcional TT		
1*	01.00502DE01	1
1**	01.00502IZ01	1
2	10.00561.00	2
3	01.00555.08	2
4	01.00585.09	2
Opcional TT		
1*	10.00502DE03	1
1**	10.00502IZ03	1
2	00.05016.08	2
3	10.00555.00	2
4	10.00585.01	2
150 4 x 4		
1*	39.15502DE00	1
1**	39.15502IZ00	1
2	39.10628.00	2
3	10.00555.00	2
4	10.15585.00	2

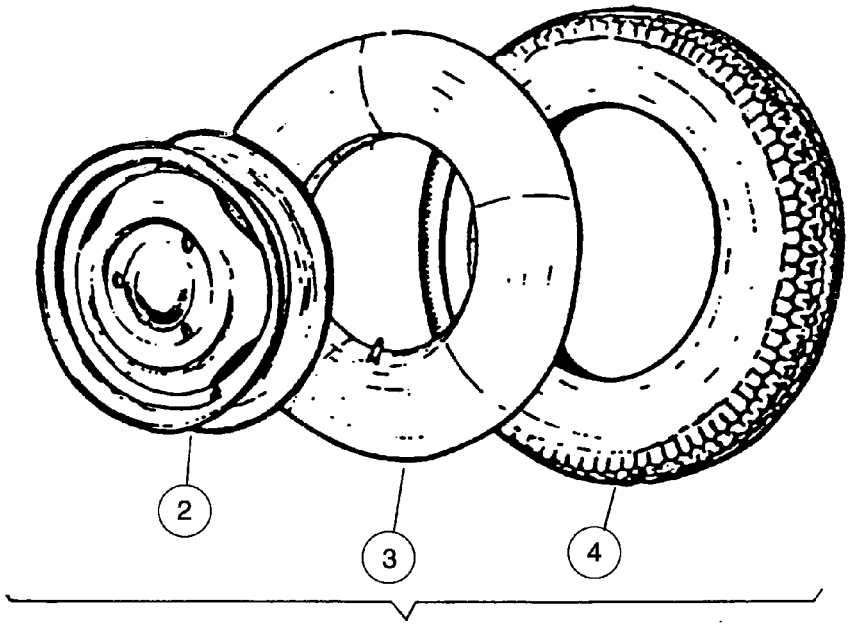

Carroceria
Carrosserie
Body
Karosserie

Soportes dirección
Supports direction
Steering Bracket
Lenkung Halter

Fig. Nº *Fig. Nº* *Fig. Nº* *Bild Nr.*	Referencia *Reference* *Part Nº* *Teil Nr.*	Cantidad *Quantité* *Quantity* *Quantität*
1	08.00701.08	1
2	02.00758.00	1
3	630.08025.86	4
4	01.01032.00	1
5	01.01030.00	1
6	02.00780.10	2
7	60.01925.01	1
7A	60.01924.01	1
8	02.00780.02	1
9	01.00735.00	2
10	02.00926.01	1
10A	02.00926.00	1

Fig. Nº *Fig. Nº* *Fig. Nº* *Bild Nr.*	Referencia *Reference* *Part Nº* *Teil Nr.*	Cantidad *Quantité* *Quantity* *Quantität*
11	630.08020.96	4
12	701.08000.66	4
13	603.08020.86	5
14	104.08000.66	5
15	101.08000.66	5
16	09.00750.00	1
17	104.06000.66	1
18	701.06000.66	1
19	02.00780.09	1
20	02.32013.00	1
21	43.70030.00	1

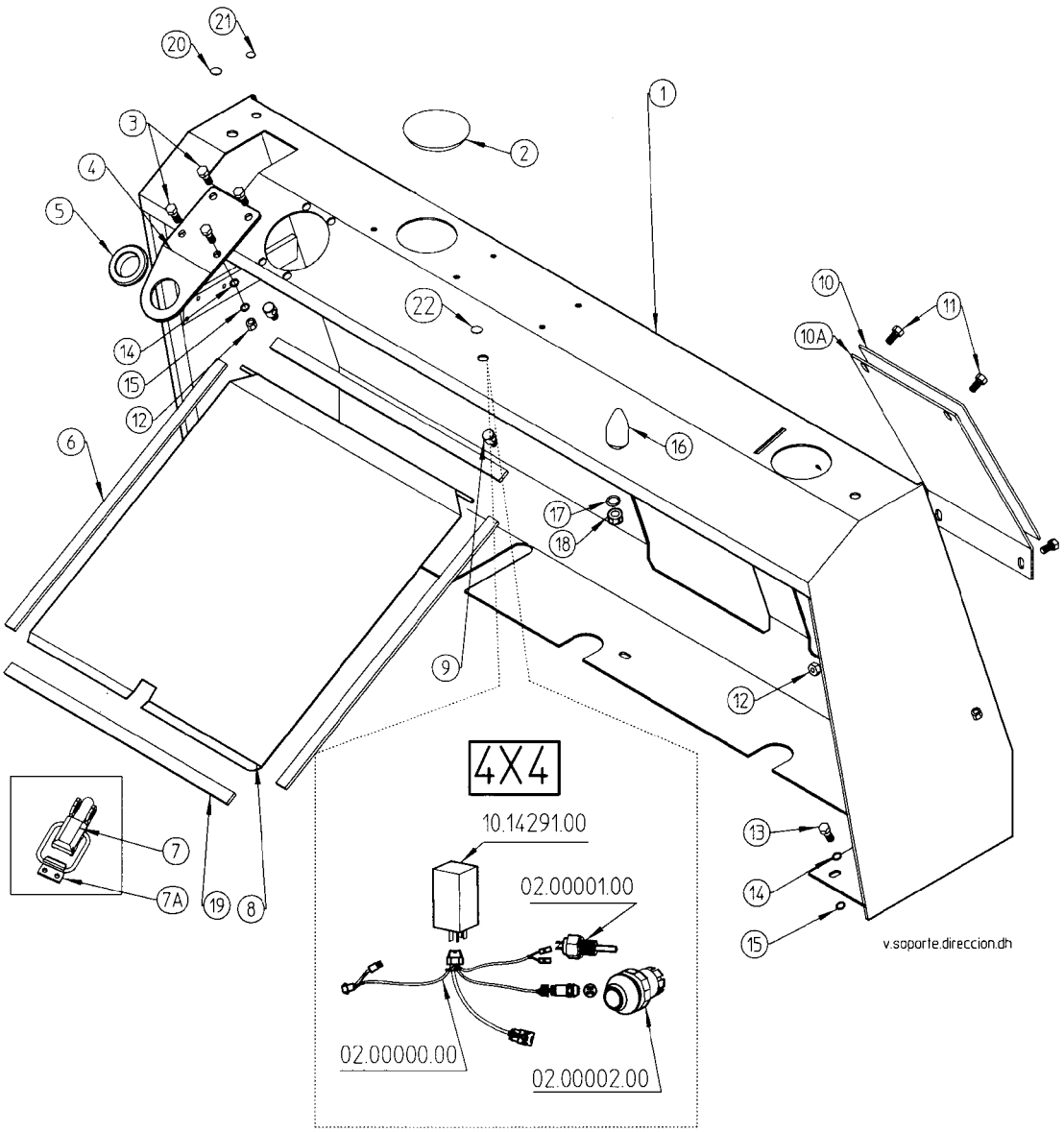

Carroceria
Carrosserie
Body
Karosserie

Protectores
Protecteurs
Protectors
Schützer

A partir del nºbastidor:
From chassis nr.:
(3) 394.33884

Fig. Nº *Fig. Nº* *Fig. Nº* *Bild Nr.*	Referencia *Reference* *Part Nº* *Teil Nr.*	Cantidad *Quantité* *Quantity* *Quantität*
1*	02.30927.00	1
1**	02.30927.01	1
2	40.00930.00	1
3	02.00923.02	1 (1)
3	39.00923.02	1 (2)
4	631.08020.86	4
5	02.11923.00	1
6	02.20922.00	1
7	02.21922.01	1
8	14.40901.00	2
9	603.08015.86	4
10	02.10923.00	1
11	02.32016,00	1
12	01.00036.01	1
13	37.00726.22	1
14	104.10000.66	4

Fig. Nº *Fig. Nº* *Fig. Nº* *Bild Nr.*	Referencia *Reference* *Part Nº* *Teil Nr.*	Cantidad *Quantité* *Quantity* *Quantität*
15	605.10020.86	4
16	104.08000.66	6
17	727.06004.86	4
18	104.06000.66	4
19	603.06015.96	4
20**	02.00757.01	1 (3)
21**	02.00826.00	1
22	117.09000.66	4
23	701.08000.66	1
24	701.12000.66	1
25	101.08000.66	6
26	603.08025.86	4
27	104.12000.66	3
28	101.12000.66	3
29	605.12020.66	3
30	605.08020.86	4
31	104.08000.66	4

* Hatz - Perkins
** Diter

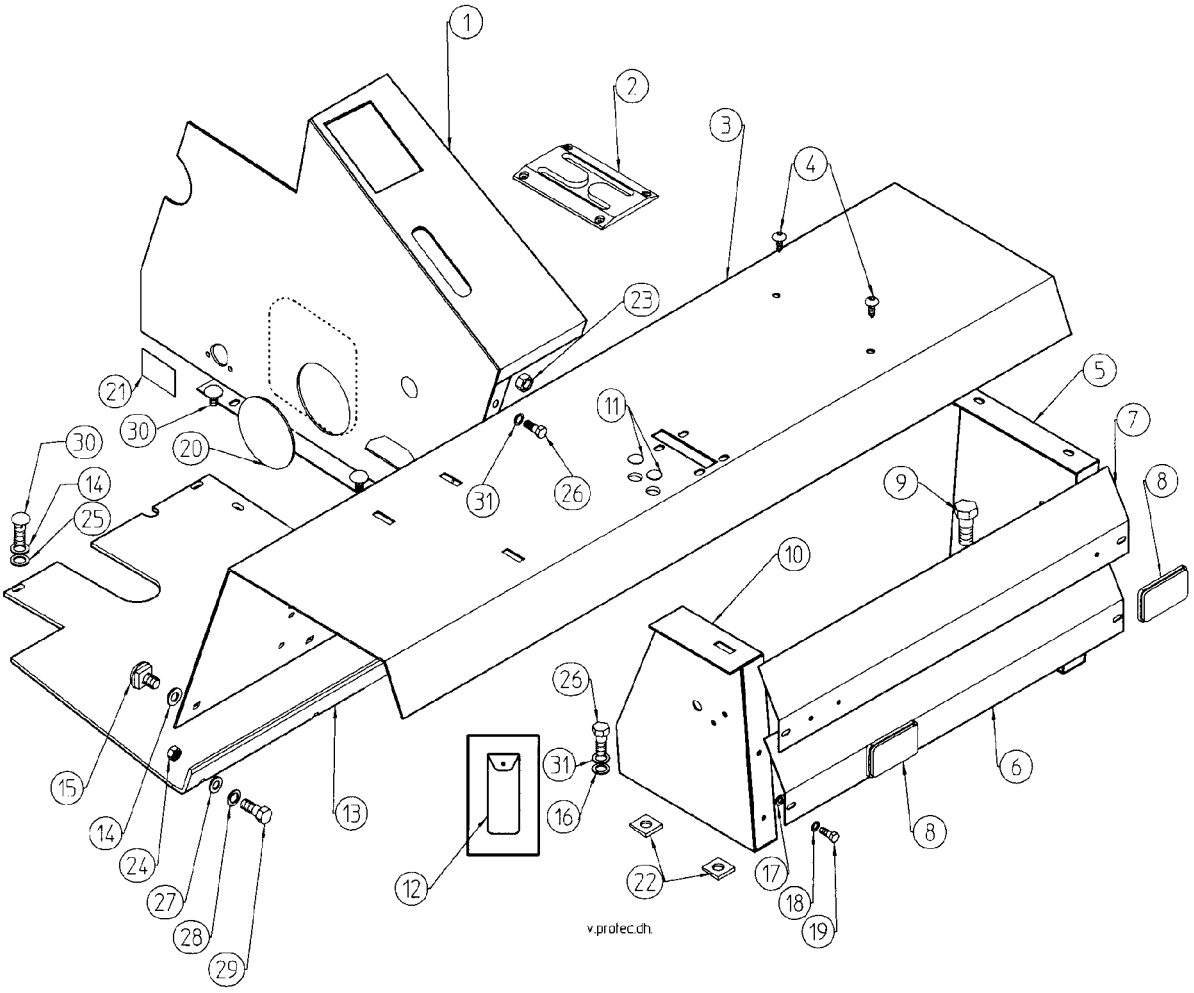

Carroceria
Carrosserie
Body
Karosserie

Faldones ruedas
Bavettes roues
Mudflaps
Blendbleche

Fig. Nº *Fig. Nº* *Fig. Nº* *Bild Nr.*	Referencia *Reference* *Part Nº* *Teil Nr.*	Cantidad *Quantité* *Quantity* *Quantität*
1	09.01832.00	1 (*)
2	09.01830.00	1 (*)
3	09.01831.00	1
4	09.01829.00	1
5	09.01827.00	1 (**)
6	09.01828.00	1 (**)
7	09.11831.01	1 (x4)
8	09.11829.01	1 (x4)

(x4) 4x4
(*) Inst. sin luces
(**) Inst. con luces

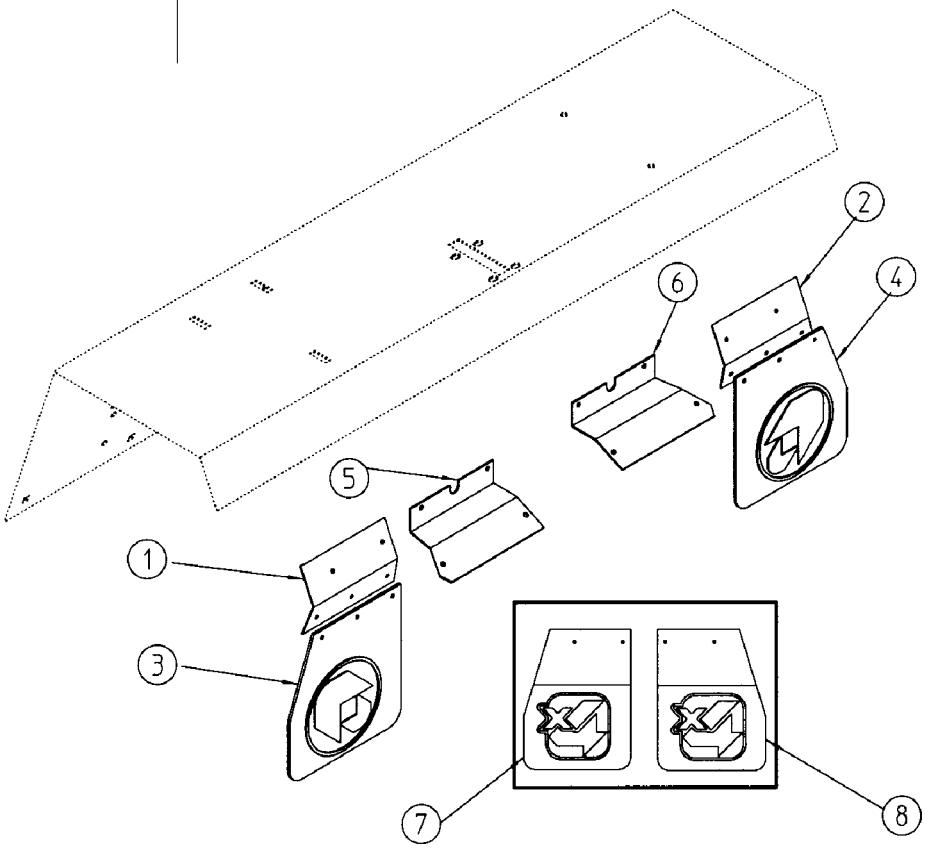

Carroceria
Carrosserie
Body
Karosserie

Protector conductor
Protecteur conducteur
Driver Protector
Fahrerschützer

Fig. Nº *Fig. Nº* *Fig. Nº* *Bild Nr.*	Referencia *Reference* *Part Nº* *Teil Nr.*	Cantidad *Quantité* *Quantity* *Quantität*
1	01.08236RE00	1
2	01.08237.21	1
3	01.08237.20	1
4	02.00788.00	1
5	09.00750.00	1
6	603.08025.86	2
7	104.08000.66	2
8	112.08000.66	2
9	603.12030.86	4
10	01.08252.00	1
11	16.00760.00	7
12	101.11000.66	7

Fig. Nº *Fig. Nº* *Fig. Nº* *Bild Nr.*	Referencia *Reference* *Part Nº* *Teil Nr.*	Cantidad *Quantité* *Quantity* *Quantität*
13	43.50941.00	7
14	01.08251.00	1
15	630.06015.96	2
16	101.06000.66	2
17	711.06000.66	2
18	09.11009.00	1
19	09.11013.00	1
20	46.00843.00	1
21	01.00804.01	1
22	46.00842.00	1
23	46.00841.00	1
24	01.08520.00	1

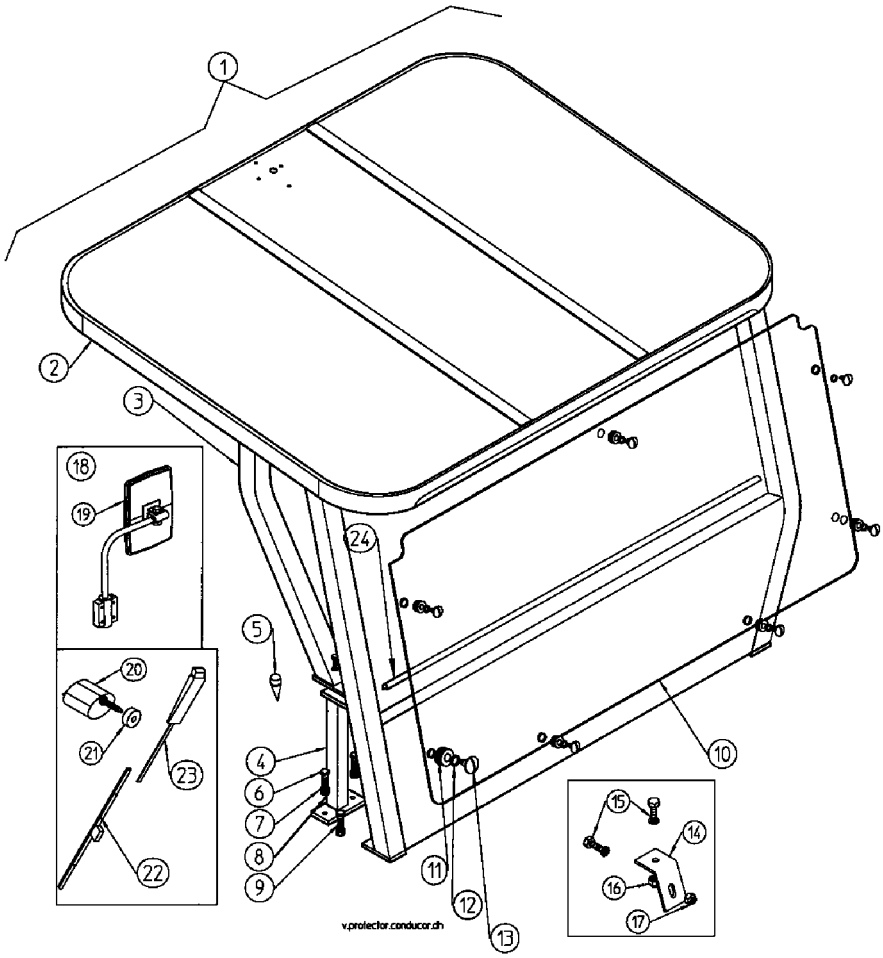

Carroceria
Carrosserie
Body
Karosserie

Asiento / Siège / Seat / Sitz

A partir del nºbastidor:
From chassis nr.:

(1) 397.29925

Fig. Nº *Fig. Nº* *Fig. Nº* *Bild Nr.*	Referencia *Reference* *Part Nº* *Teil Nr.*	Cantidad *Quantité* *Quantity* *Quantität*
1	01.00706.07	1 (1)
2	605.10025.86	4
3	104.10000.66	4
4	701.10000.66	4
5	711.10000.66	4
6	45.60002.01	1

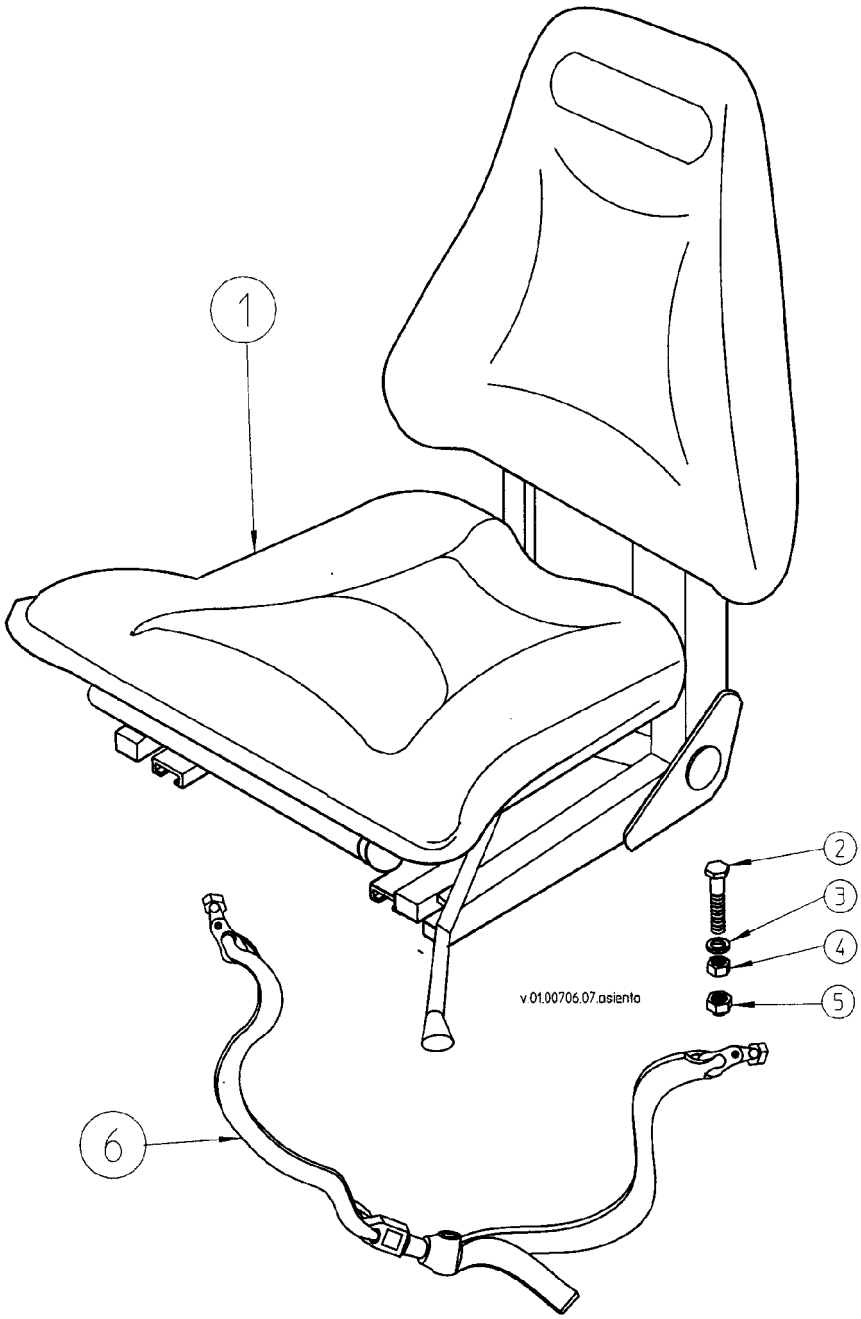

Carroceria
Carrosserie
Body
Karosserie

Contrapeso
Contrepoids
Counterweight
Gegengewicht

Fig. Nº *Fig. Nº* *Fig. Nº* *Bild Nr.*	Referencia *Reference* *Part Nº* *Teil Nr.*	Cantidad *Quantité* *Quantity* *Quantität*
1	15.08350.00	1
2	603.05010.86	1
3	15.00836.00	1
4	15.00835.00	1
5	15.00834.00	1
6	14.00788.02	1
7	701.16000.86	3
8	104.16000.86	4
9	604.16100.86	2
10	604.16060.86	1
11	604.16090.86	1
12	101.16000.66	4

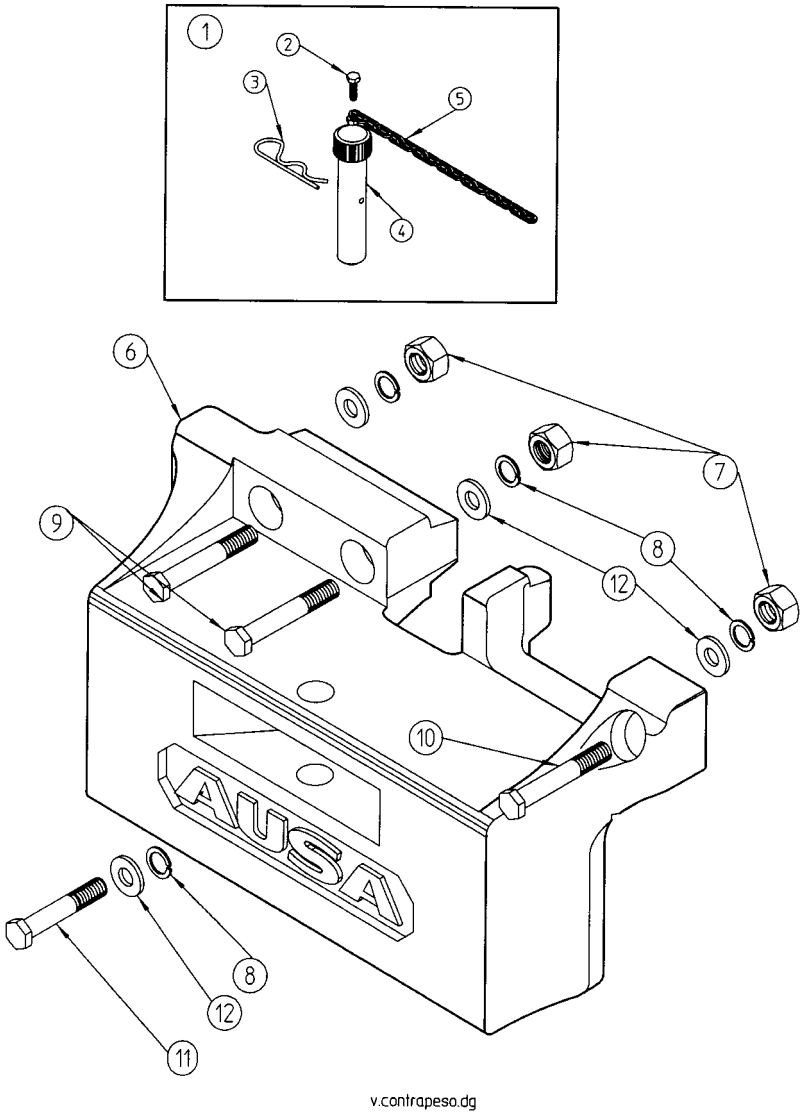

Implementos funcionamiento máquina

Implements fonctionnement machine

Machine operation tools

Bauteile des Gabelträgers

Soporte tambor
Support tambour
Drum support
Trommel-Unterstützung

A partir del nºbastidor:
From chassis nr.:

(1) 937.32667

Fig. Nº *Fig. Nº* *Fig. Nº* *Bild Nr.*	Referencia *Reference* *Part Nº* *Teil Nr.*	Cantidad *Quantité* *Quantity* *Quantität*
1	09.55032.01	1
2	09.55070.00	4
3	09.55090.00	4
4	318.30018.00	4
5	54.55030.00	2
6	54.55031.00	2
7	901.08000.33	2
8	43.50129.00	2
9	603.10030.86	2
10	104.10000.66	2
11	701.10000.66	2
12	402.06030.00	1
13	101.20000.66	1
14	09.55192.00	1
15	09.55100.00	1 (1)
16	15.00836.02	1

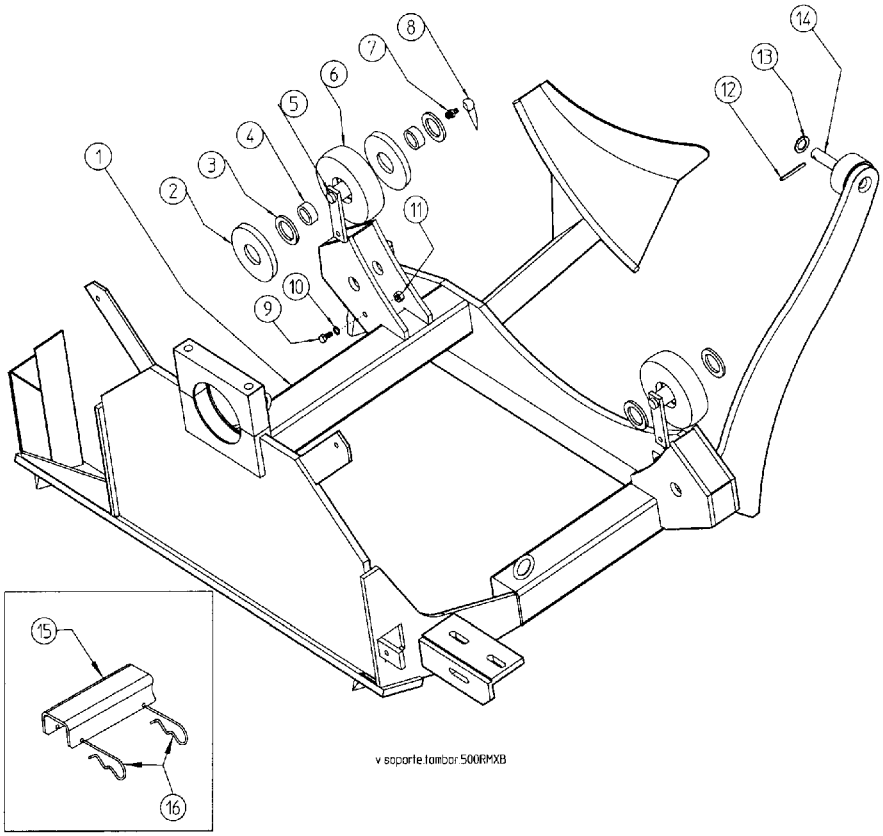

Implementos funcionamiento máquina

Implements fonctionnement machine

Machine operation tools

Bauteile des Gabelträgers

Canales descarga
Décharge canaux
Discharge channels
Begleichung-Kanäle

Fig. Nº *Fig. Nº* *Fig. Nº* *Bild Nr.*	Referencia *Reference* *Part Nº* *Teil Nr.*	Cantidad *Quantité* *Quantity* *Quantität*
1	09.55134.00	1
2	09.55133.00	1
3	09.55131.00	1
4	901.08000.33	1
5	604.10120.86	4
6	09.55132.00	1
7	711.10000.66	4

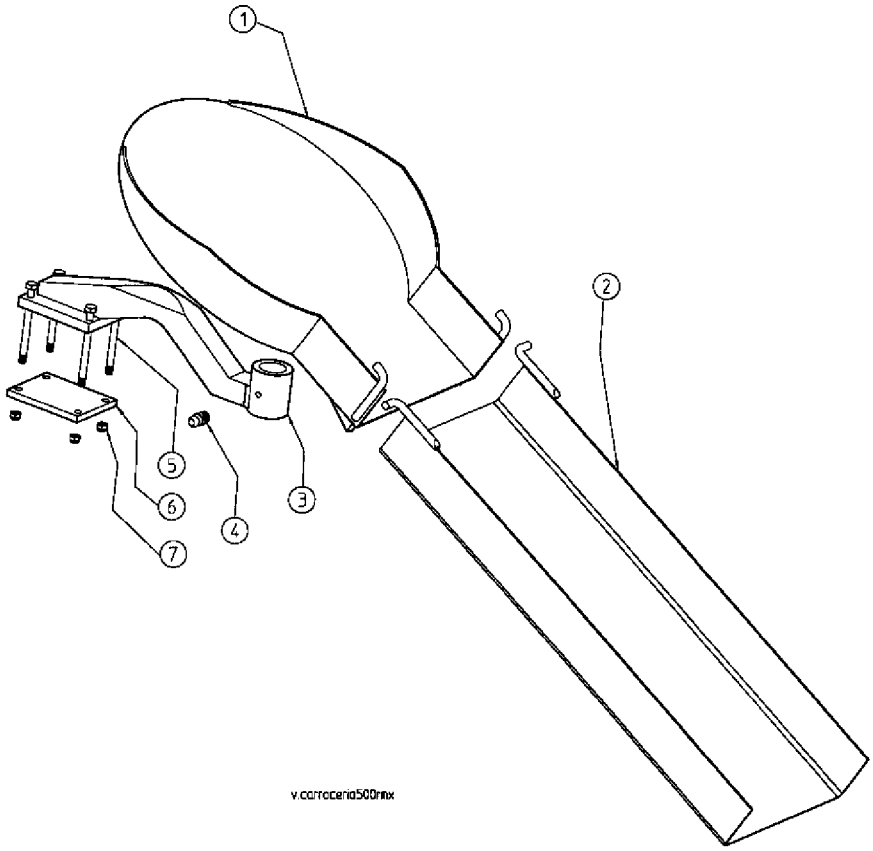

Implementos funcionamiento máquina

Implements fonctionnement machine

Machine operation tools

Bauteile des Gabelträgers

Conjunto bombo
Ensemble cuve
Drum assembly
Trommel gerät

Fig. Nº *Fig. Nº* *Fig. Nº* *Bild Nr.*	Referencia *Reference* *Part Nº* *Teil Nr.*	Cantidad *Quantité* *Quantity* *Quantität*
1	09.55025.00	1
2	54.55026.00	1
3	701.12000.66	1
4	309.65033.00	1
5	101.65000.66	1
6	904.65000.66	1
7	701.10000.66	5

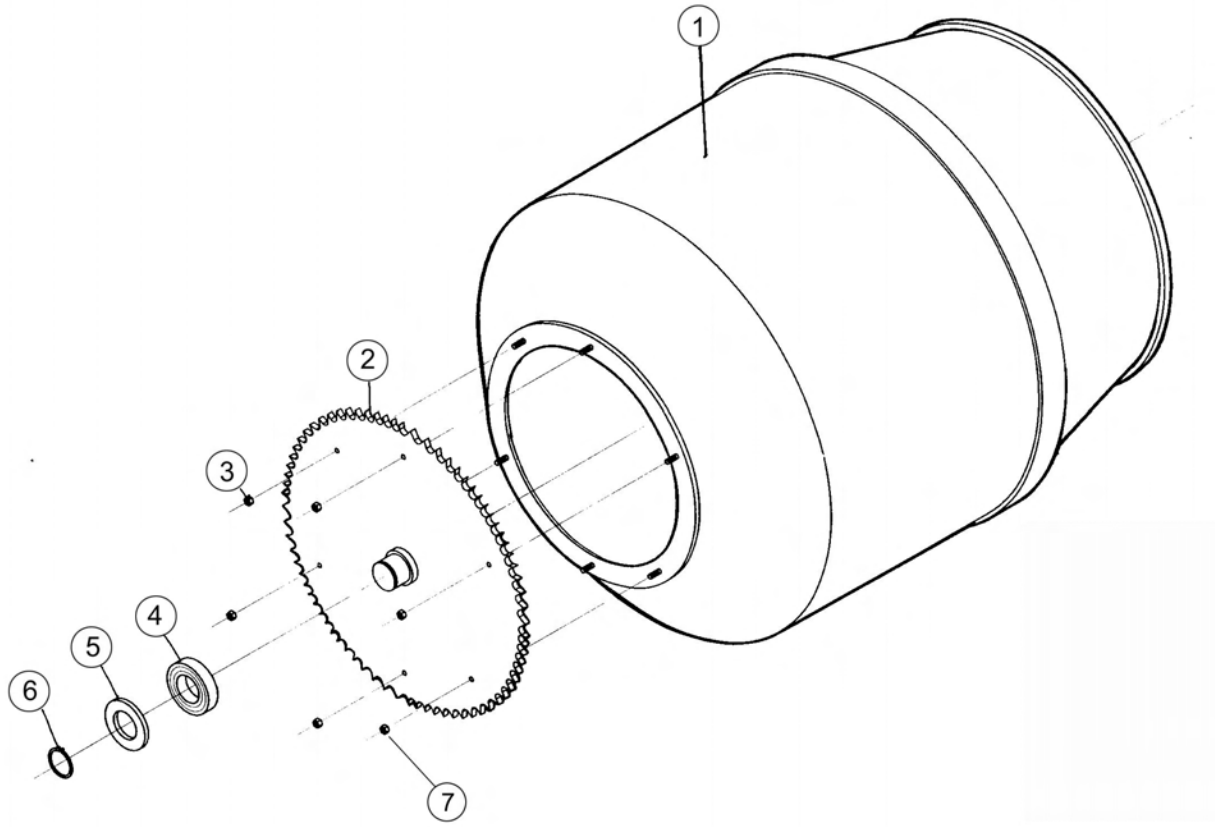

Implementos funcionamiento máquina

Implements fonctionnement machine

Machine operation tools

Bauteile des Gabelträgers

Cilindro volcado bombo
Cylindre renversé batteur
Cylinder overturned drummer
Zylinder kippte Trommler um

Fig. Nº *Fig. Nº* *Fig. Nº* *Bild Nr.*	Referencia *Reference* *Part Nº* *Teil Nr.*	Cantidad *Quantité* *Quantity* *Quantität*
1	09.00500.07	1
2	207.63028.50	1
3	08.00521.04	1
4	201.22003.50	1
5	09.87228.00	1
6	08.00525.01	1
7	08.00528.02	1
8	217.30006.50	1
9	08.00530.01	1
10	201.05153.50	1
11	203.30008.50	1

Fig. Nº *Fig. Nº* *Fig. Nº* *Bild Nr.*	Referencia *Reference* *Part Nº* *Teil Nr.*	Cantidad *Quantité* *Quantity* *Quantität*
12	09.00520.02	1
13	201.30004.50	1
14	08.00527.00	2
15	15.01216.00	2
16	603.06015.86	4
17	15.00832.00	2
18	901.08000.33	2

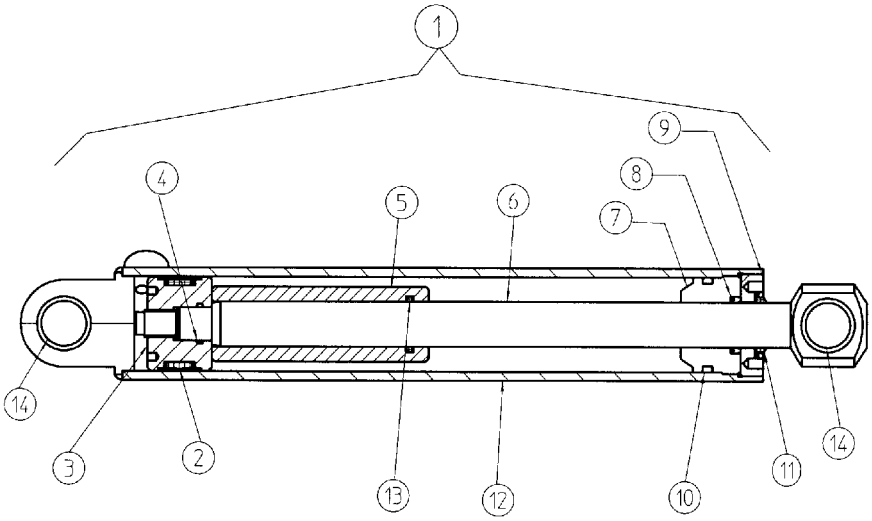

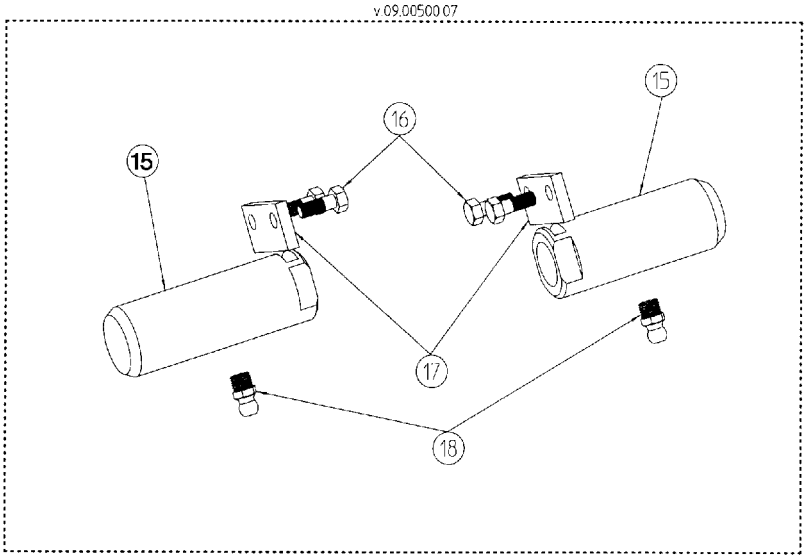

Implementos funcionamiento máquina

Implements fonctionnement machine

Machine operation tools

Bauteile des Gabelträgers

Motor accionamiento bombo
Moteur actionnement cuve
Drum actionament engine
Trommeln Sie actionament-Motor

Fig. Nº *Fig. Nº* *Fig. Nº* *Bild Nr.*	Referencia *Reference* *Part Nº* *Teil Nr.*	Cantidad *Quantité* *Quantity* *Quantität*
1	54.55001.01	1
2	54.55002.00	1
3	54.55003.00	1
4	09.55189.00	1
5	54.55005.00	1
6	603.06025.86	1
7	604.12050.86	3
8	604.12045.86	2
9	711.12000.66	5
10	55.55010.01	1
11	54.55007.00	1
12	54.55008.00	1
13	54.55009.00	1
14	54.55010.00	1
15	701.14000.66	1

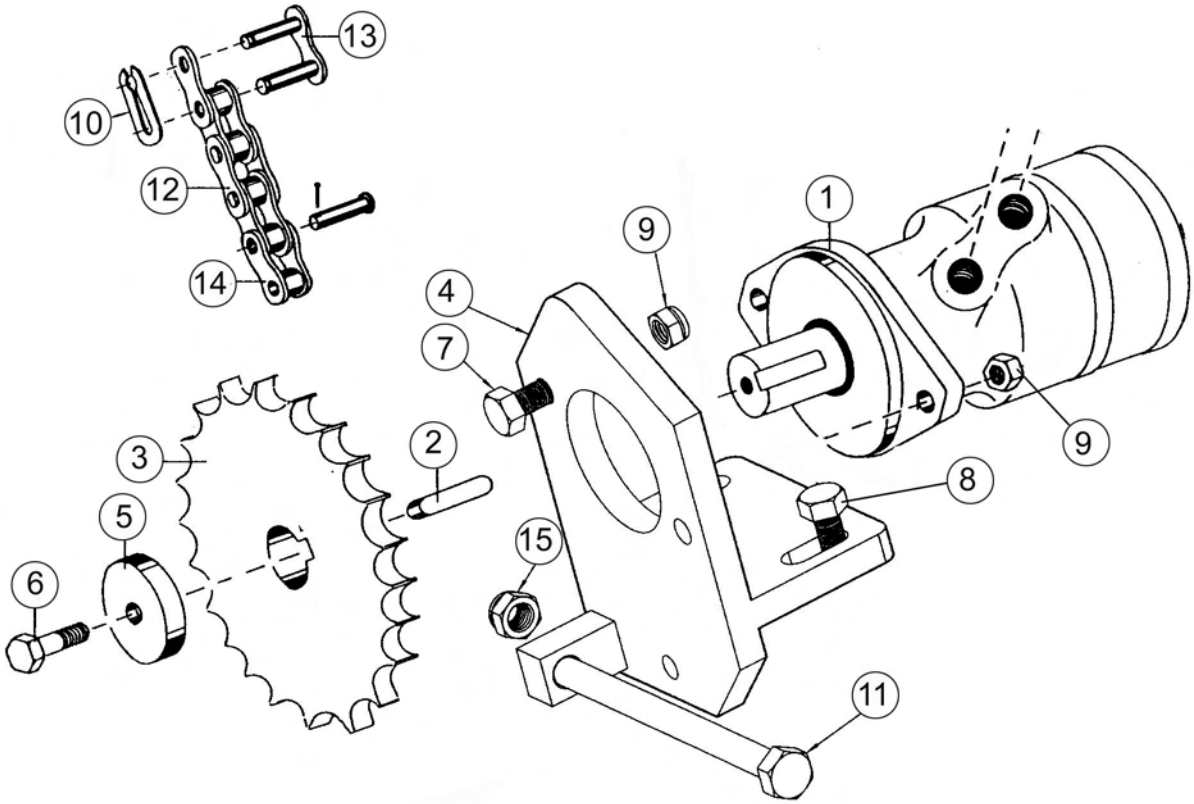

Implementos funcionamiento máquina

Implements fonctionnement machine

Machine operation tools

Bauteile des Gabelträgers

Bastidor
Chassis
Chassis
Fahrgestell

Fig. Nº *Fig. Nº* *Fig. Nº* *Bild Nr.*	Referencia *Reference* *Part Nº* *Teil Nr.*	Cantidad *Quantité* *Quantity* *Quantität*
1	09.55050.00	1
2	604.16140.00	2
3	54.55033.00	1
4	09.55032.01	1

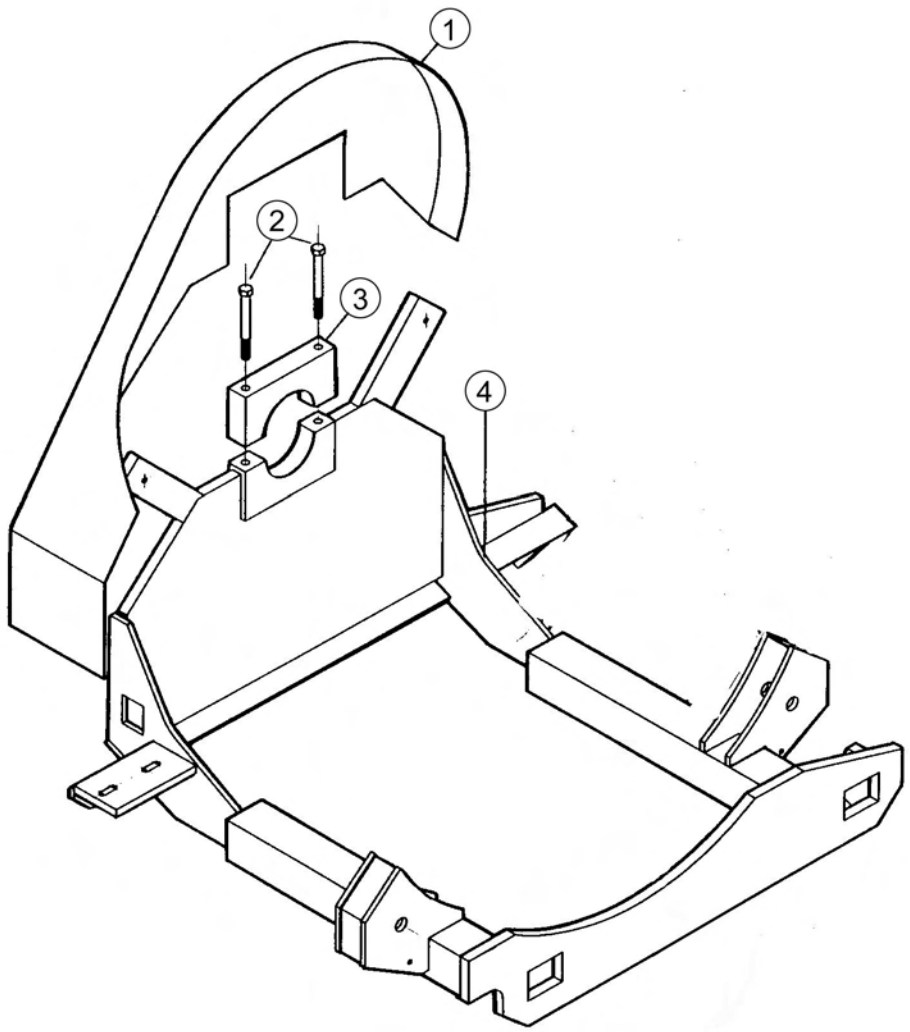

Instalación circuito hidráulico / *Installation circuit hydraulique / Hydraulic diagram installation / Baugruppen des Arbeits Hydraulik*

a partir del nº de chasis 936.28451
du nº du châssis 936.28451
from the chassis nº 936.28451
vom Chassis-nº 936.28451

Accionamiento / *Actionnement /Actionament / Antrieb HATZ*

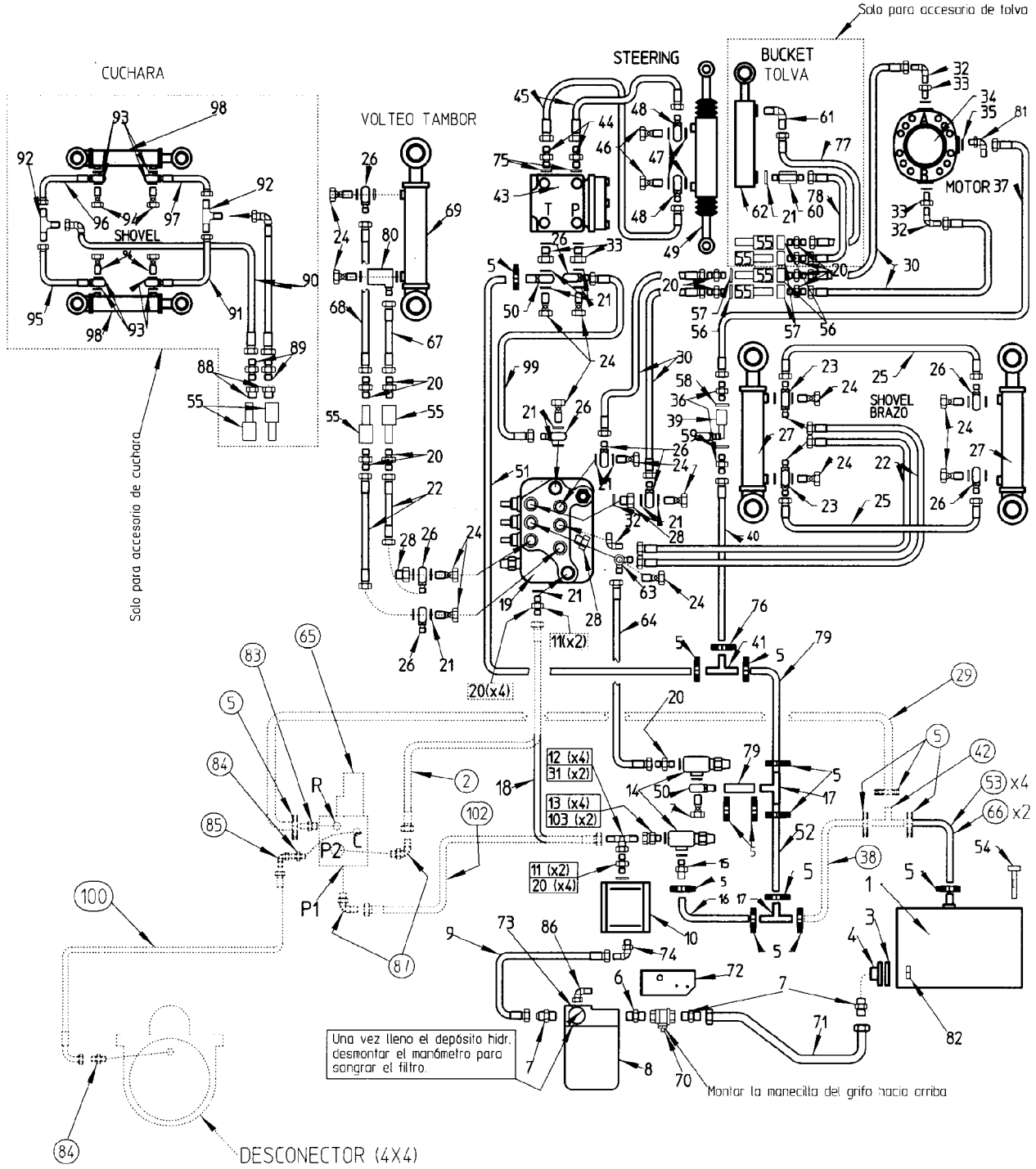

Para motor Diter y Hatz

Instalación circuito hidráulico

Installation circuit hydraulique

Hydraulic diagram installation

Baugruppen des Arbeits Hydraulik

Accionamiento
Actionnement
Actionament
Antrieb

HATZ

a partir del nº de chasis 936.28451
du nº du châssis 936.28451
from the chassis nº 936.28451
vom Chassis-nº 936.28451

HT.ARMX.050-.00
ESQUEMA TUBERIAS GAMA RMX 050

n	REF.	CANT.	NOTAS	n	REF.	CANT.	NOTAS
1	02.00924.03	1		53	10.01358.00	1	SOLO PARA (4X4)
2	54.01825.00	1	SOLO PARA (4X4)	54	09.00631.00	1	
3	201.75003.50	1		55	16.01396.01	6	
4	02.01432.00	1		56	43.50124.00	3	
5	912.20032.00	12		57	43.50125.00	3	
6	39.10080.00	1		58	43.50127.00	1	
7	55.01448.00	5		59	43.50128.00	1	
8	08.55022.00	1		60	09.01203.01	1	
9	09.55141.00	1	SOLO PARA MOTOR HATZ	61	45.01453.00	1	
10	15.01203.02	1		62	08.00500.08	1	
11	08.00313.00	1	PARA (X2)	63	15.01223.00	1	
12	08.10503.00	1	PARA (X4)	64	45.01351.03	1	
13	60.13016.00	1	PARA (X4)	65	10.03220.00	1	SOLO PARA (4X4)
14	47.01469.00	2		66	10.01360.00	1	PARA (X2)
15	08.00301.02	1		67	15.01234.00	1	
16	46.00304.00	1		68	15.01235.00	2	1 PIEZA (SOLO PARA (4X4)
17	10.00692.00	2		69	09.00500.07	1	
18	54.01819.01	1		70	43.01351.00	1	
19	08.00330.03	1		71	60.01373.00	1	
20	08.00319.00	11	PARA (X4)	72	39.10061.00	1	
21	08.00317.00	22		73	60.20102.00	1	
22	10.01356.00	4		74	45.01424.00	1	
23	15.01223.00	2		75	08.00316.00	2	
24	08.00315.00	13		76	912.08016.66	1	
25	45.01011.01	2		77	14.01326.00	1	
26	08.00298.00	9		78	09.13360.00	1	
27	09.12101.01	2		79	46.01478.00	2	
28	10.01352.00	3		80	09.01203.00	1	
29	08.00130.00	1	SOLO PARA (4X4)	81	10.02144.00	1	
30	14.01322.00	4		82	723.34000.66	1	
31	08.60080.00	1	PARA (X2)	83	46.50677.00	1	SOLO PARA (4X4)
32	43.01453.00	3		84	09.00340.00	2	SOLO PARA (4X4)
33	08.00314.00	4		85	43.50114.00	1	SOLO PARA (4X4)
34	54.55001.01	1		86	10.02144.00	1	
35	28.00341.00	1		87	43.01453.00	2	SOLO PARA (4X4)
36	28.00337.00	2		88	28.00338.00	2	
37	42.00504.01	1		89	43.70942.00	2	
38	10.16882.00	1	SOLO PARA (4X4)	90	10.13138.00	2	
39	09.13014.00	1		91	10.08004.00	1	
40	09.13180.01	1		92	10.08000.00	2	
41	09.00692.00	1		93	28.00341.00	8	
42	09.00692.00	1	SOLO PARA (4X4)	94	28.00340.00	4	
43	10.00685.01	1		95	10.08005.00	1	
44	52.00108.00	2		96	10.08003.00	1	
45	02.00145.00	2		97	10.08002.00	1	
46	28.00340.00	2		98	09.03000.00	2	
47	28.00341.00	4		99	10.00698.00	1	
48	28.00339.00	2		100	10.16880.00	1	SOLO PARA (4X4)
49	01.00617.10	1		101	---	1	
50	08.00297.00	2		102	10.00698.00	1	SOLO PARA (4X4)
51	15.01616.00	1		103	08.60200.00	1	PARA (X2)
52	45.01486.01	1					

Instalación circuito hidráulico / *Installation circuit hydraulique / Hydraulic diagram installation / Baugruppen des Arbeits Hydraulik*

Accionamiento / *Actionnement /Actionament / Antrieb* PERKINS

A partir del nºbastidor:
From chassis nr.:
936.28451

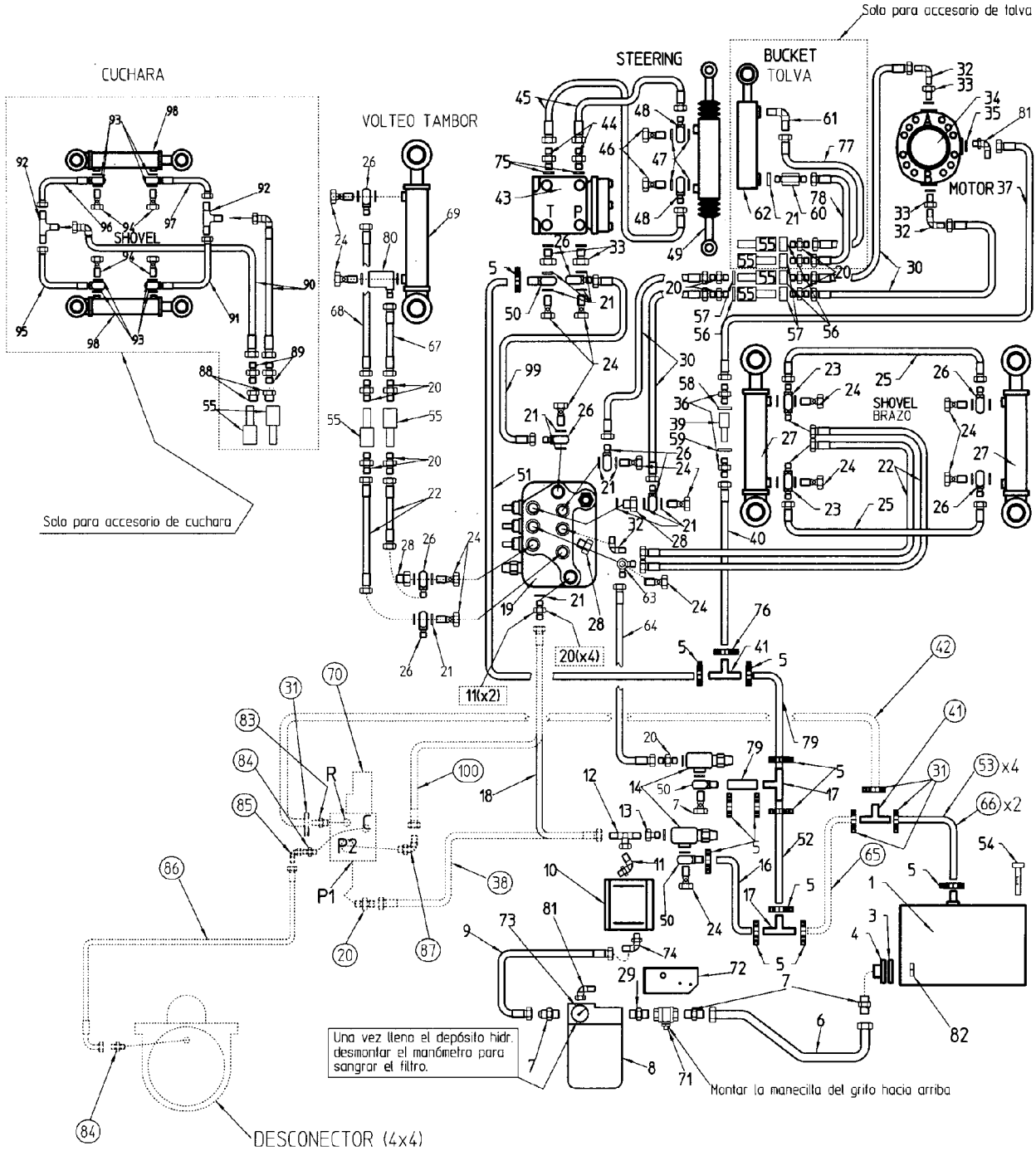

Para motor Perkins

Instalación circuito hidráulico

Installation circuit hydraulique

Hydraulic diagram installation

Baugruppen des Arbeits Hydraulik

Accionamiento
Actionnement
Actionament
Antrieb

PERKINS

A partir del nºbastidor:
From chassis nr.:

936.28451

HT.ARMX.050P.00
ESQUEMA TUBERIAS GAMA RMX 050

n	REF.	CANT.	NOTAS	n	REF.	CANT.	NOTAS
1	02.00924.03	1		51	15.01616.00	1	
2	---	1		52	45.01486.01	1	
3	201.75003.50	1		53	10.01358.00	1	SOLO PARA (4X4)
4	02.01432.00	1		54	09.00631.00	1	
5	912.20032.00	12		55	16.01396.01	6	
6	60.01373.00	1		56	43.50124.00	3	
7	39.10083.00	5		57	43.50125.00	3	
8	08.55022.00	1		58	43.50127.00	1	
9	09.13800.00	1		59	43.50128.00	1	
10	09.13010.00	1		60	09.01203.01	1	
11	43.01453.00	1		61	45.01453.00	1	
12	08.10503.00	1		62	08.00500.08	1	
13	60.13016.00	1		63	15.01223.00	1	
14	47.01469.00	2		64	45.01351.03	1	
15	---	1		65	10.16882.00	1	SOLO PARA (4X4)
16	46.00304.00	1		66	10.01360.00	1	PARA (X2)
17	10.00692.00	2		67	15.01234.00	1	
18	54.01825.00	1		68	15.01235.00	1	
19	08.00330.03	1		69	09.00500.07	1	
20	08.00319.00	11	-1- SOLO PARA (4X4)	70	10.03220.00	1	SOLO PARA (4X4)
21	08.00317.00	22		71	43.01351.00	1	
22	10.01356.00	4		72	39.10061.00	1	
23	15.01223.00	2		73	60.20102.00	1	
24	08.00315.00	13		74	45.01424.00	1	
25	45.01011.01	2		75	08.00316.00	2	
26	08.00298.00	9		76	912.08016.66	1	
27	09.12101.01	2		77	14.01326.00	1	
28	10.01352.00	3		78	09.13360.00	1	
29	39.10080.00	1		79	46.01478.00	2	
30	14.01322.00	4		80	09.01203.00	1	
31	912.20032.00	4	SOLO PARA (4X4)	81	10.02144.00	2	
32	43.01453.00	3		82	723.34000.66	1	
33	08.00314.00	4		83	46.50677.00	1	SOLO PARA (4X4)
34	54.55001.01	1		84	09.00340.00	2	SOLO PARA (4X4)
35	28.00341.00	1		85	43.50114.00	1	SOLO PARA (4X4)
36	28.00337.00	2		86	10.16880.00	1	SOLO PARA (4X4)
37	42.00504.01	1		87	43.01453.00	2	SOLO PARA (4X4)
38	10.00698.00	1	SOLO PARA (4X4)	88	28.00338.00	2	
39	09.13014.00	1		89	43.70942.00	2	
40	09.13180.01	1		90	10.13138.00	2	
41	09.00692.00	1	SOLO PARA (4X4)	91	10.08004.00	1	
42	08.00130.00	1	SOLO PARA (4X4)	92	10.08000.00	1	
43	10.00685.01	1		93	28.00341.00	8	
44	52.00108.00	2		94	28.00340.00	4	
45	02.00145.00	1		95	10.08005.00	1	
46	28.00340.00	2		96	10.08003.00	1	
47	28.00341.00	4		97	10.08002.00	1	
48	28.00339.00	2		98	09.03000.00	2	
49	01.00617.11	1		99	10.00698.00	1	
50	08.00297.00	3		100	54.01825.00	1	SOLO PARA (4X4)

Instalación circuito hidráulico

Installation circuit hydraulique

Hydraulic diagram installation

Baugruppen des Arbeits Hydraulik

Distribuidor
Distributeur
Distributor
Steuerschalter

Fig. Nº *Fig. Nº* *Fig. Nº* *Bild Nr.*	Referencia *Reference* *Part Nº* *Teil Nr.*	Cantidad *Quantité* *Quantity* *Quantität*
1	09.00330.00	1 1E
1	08.00330.01	1 2E
1	08.00330.03	1 3E
2	09.01451.00	2
3	60.01007.00	2
4	630.08060.96	2
5	711.08000.66	2

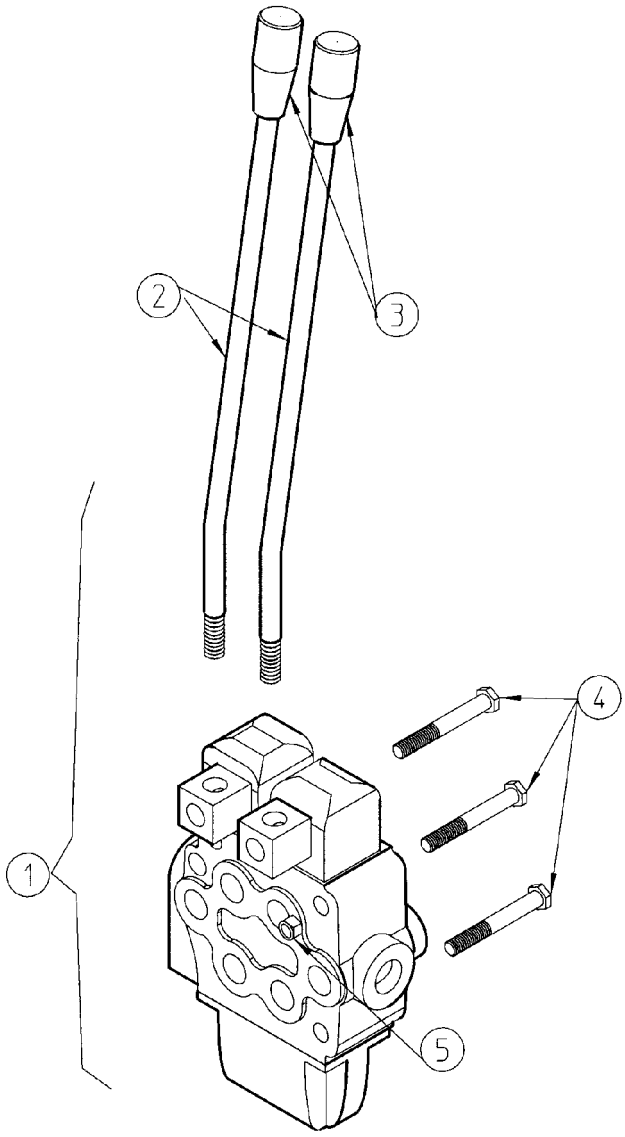

v.distribuidor.rms

Instalación circuito hidráulico

Installation circuit hydraulique

Hydraulic diagram installation

Baugruppen des Arbeits Hydraulik

Depósito aceite
Reservoir a huile
Hidraulic Oil Tank
Ölbehalter

A partir del nºbastidor:
From chassis nr.:
(1) 141.32263

Fig. Nº *Fig. Nº* *Fig. Nº* *Bild Nr.*	Referencia *Reference* *Part Nº* *Teil Nr.*	Cantidad *Quantité* *Quantity* *Quantität*		Fig. Nº *Fig. Nº* *Fig. Nº* *Bild Nr.*	Referencia *Reference* *Part Nº* *Teil Nr.*	Cantidad *Quantité* *Quantity* *Quantität*	
1	02.09240.02	1		10	104.08000.66	4	
2	02.00924.02	1		11	09.00631.00	1	
3	603.08025.86	2		12	701.08000.66	4	
				13	43.70940.00	1	
5	201.75003.50	1		14	45.01423.00	1	
6	02.01432.01	1		15	08.00316.01	1	(1)
7	104.06000.66	6		16	912.09000.66	1	
8	603.06015.86	6		17	43.00750.08	1	
9	603.08020.86	4					

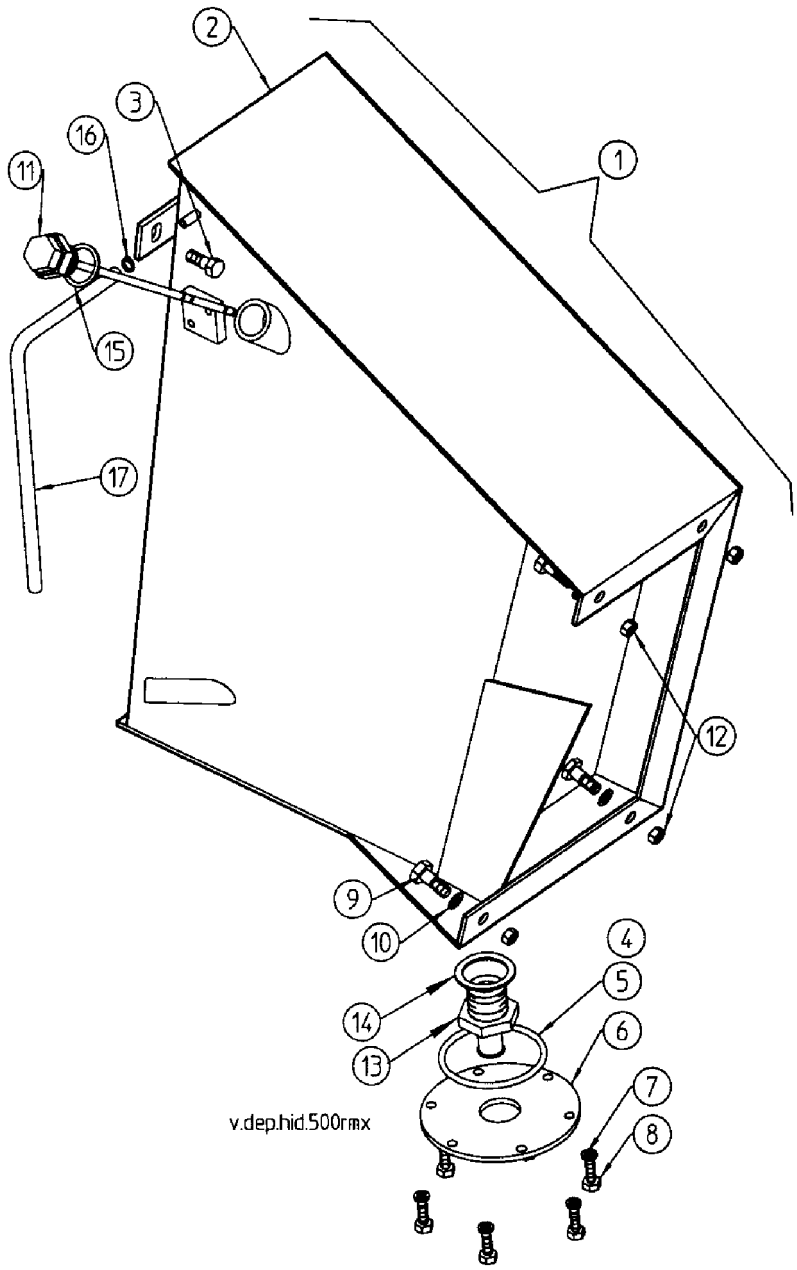

Instalación eléctrica

Installation electrique

Electric installation

Electroanlage

Arranque
Demarrage
Starting elec.
Electrische Anlage

HATZ

A partir del nºbastidor:
From chassis nr.:

(1) 935.33889
(2) 936.34548

Fig. Nº *Fig. Nº* *Fig. Nº* *Bild Nr.*	Referencia *Reference* *Part Nº* *Teil Nr.*	Cantidad *Quantité* *Quantity* *Quantität*
2	40.92200.00	1
3	40.08440.10	1
4	86.90000.06	1
5	86.90000.26	1
6	86.90000.11	1
6A	86.90000.10	1
7	16.01415.00	1
8	01.00881.00	1
9	01.01360.00	1
10	601.12025.86	2
11	01.00855.00	1
12	00.09034.00	1
13	104.08000.66	2
14	601.08020.86	2
15	02.01926.02	1 (2)
16	00.09035.01	1
17	15.01443.00	1
18	01.00842.00	1

Fig. Nº *Fig. Nº* *Fig. Nº* *Bild Nr.*	Referencia *Reference* *Part Nº* *Teil Nr.*	Cantidad *Quantité* *Quantity* *Quantität*
19	603.08015.86	1
20	20.11101.00	1 (1)
21	104.08000.66	1
22	701.08000.66	1
23	46.10002.00	1
24	02.02926.01	1
25	01.00844.99	1
26	02.00189.01	1
27	02.00189.00	1
28	85.11800.23	1
29	83.00840.05	1

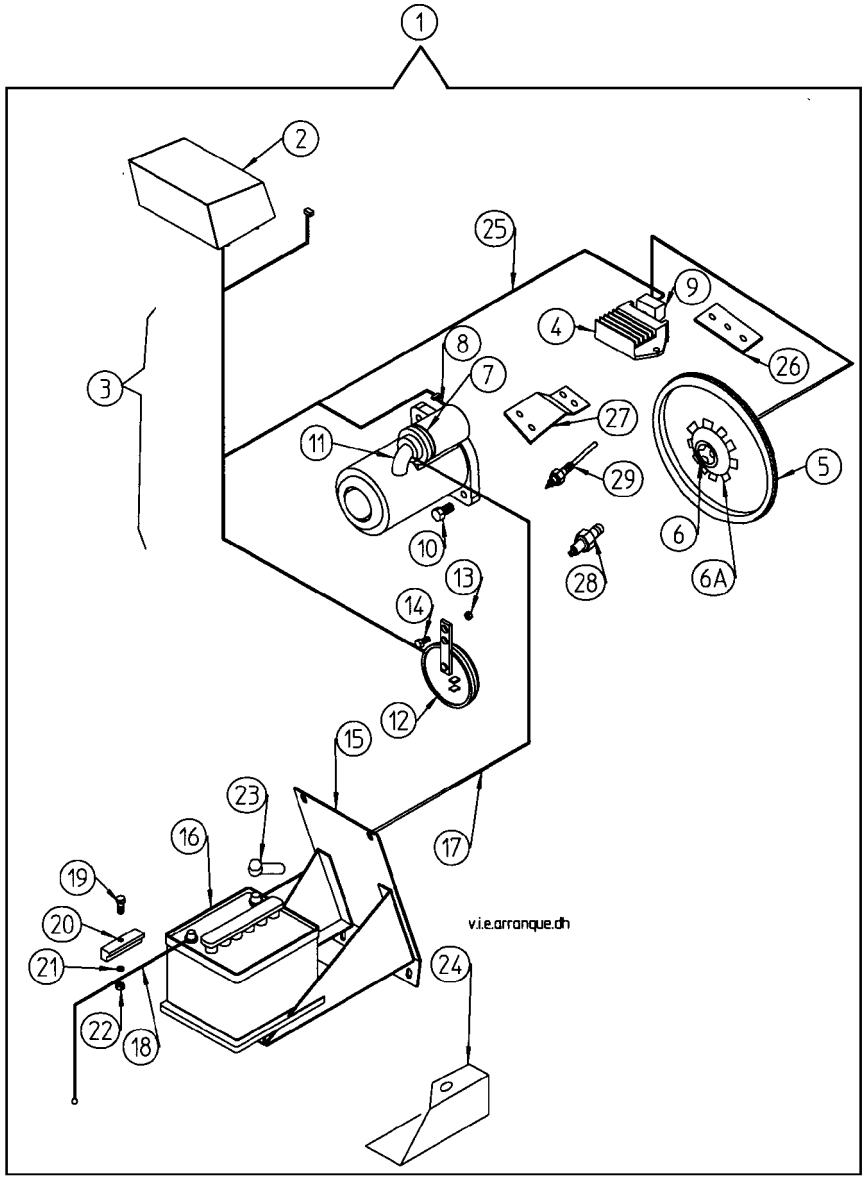

Instalación eléctrica

Installation electrique

Electric installation

Electroanlage

Tablier arranque
Tableau demarrage
Starting Panel
Analsspritzward

HATZ

(1) 116.29777

Fig. Nº *Fig. Nº* *Fig. Nº* *Bild Nr.*	Referencia *Reference* *Part Nº* *Teil Nr.*	Cantidad *Quantité* *Quantity* *Quantität*
1 *	40.92200.00	1
2 **	40.09220.00	1
3	09.00923.07	1
4	01.00928.00	1
5	43.50032.00	1
6	603.06015.96	1
7	01.00796.00	1
8	43.50024.01	1
9	43.50025.00	1
10	46.50029.00	1
10	46.50029.01	1

Fig. Nº *Fig. Nº* *Fig. Nº* *Bild Nr.*	Referencia *Reference* *Part Nº* *Teil Nr.*	Cantidad *Quantité* *Quantity* *Quantität*
11	46.50021.06	1
12	01.00823.03	1
13	01.00844.14	1
14	09.00922.03	1
15	43.50022.01	1
16/1	43.50022.02	1 (1)
16/2	43.50080.00	2 (1)
16/3	43.50022.03	2 (1)
16/3	43.50022.04	2
16/4	43.50022.10	2
17	58.15340.00	1
18	02.14113.00	1

* C. tablier
** C. tapa

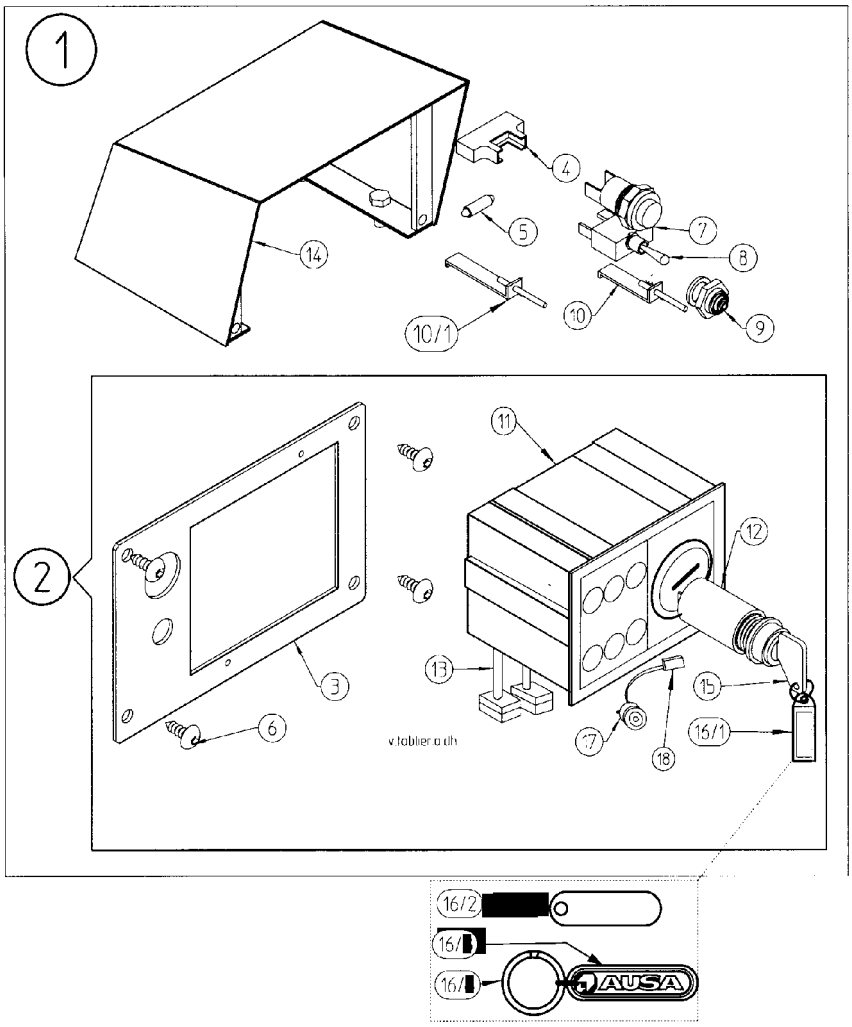

Instalación eléctrica

Installation electrique

Electric installation

Electroanlage

Instalación eléctrica alumbrado
Equipement electrique eclairage
Lighting Installation
Elektrische Leuchtanlage

HATZ

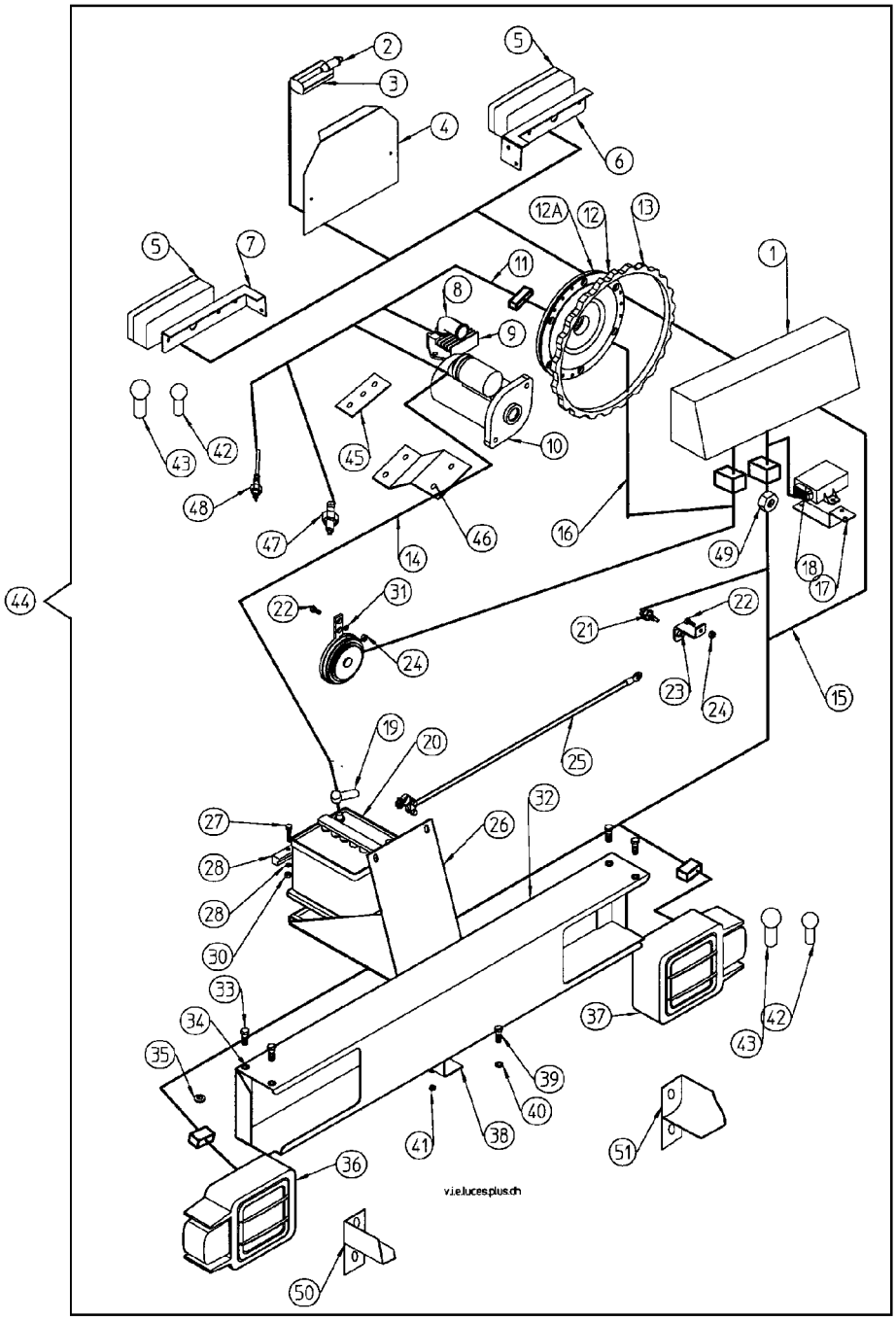

Instalación eléctrica

Installation electrique

Electric installation

Electroanlage

Instalación eléctrica alumbrado
Equipement electrique eclairage
Lighting Installation
Elektrische Leuchtanlage

HATZ

A partir del nºbastidor:
From chassis nr.:

(1) 936.28451
(2) 936.34548

Fig. Nº *Fig. Nº* *Fig. Nº* *Bild Nr.*	Referencia *Reference* *Part Nº* *Teil Nr.*	Cantidad *Quantité* *Quantity* *Quantität*	
1	40.92200.00	1	
2	46.01324.00	1	
3	46.10755.00	1	
4	46.10754.00	1	
5	54.01327.00	2	
6	16.01449.12	1	
7	16.01449.13	1	
8	01.00855.00	1	
9	86.90000.06	1	
10	86.90000.04	1	
11	01.00881.00	1	
12	86.90000.11	1	
12A	86.90000.10	1	
13	86.90000.26	1	
14	15.01443.00	1	
15	37.01242.12	1	
16	01.00885.00	1	
17	01.00881.00	1	
18	43.10623.00	1	
19	46.10002.00	1	
20	00.09035.01	1	
21	45.01521.00	1	
22	603.06015.86	2	
23	09.00328.00	1	
24	701.06000.66	2	
25	01.00842.00	1	
26	02.01926.02	1	(2)
27	603.06030.86	1	

Fig. Nº *Fig. Nº* *Fig. Nº* *Bild Nr.*	Referencia *Reference* *Part Nº* *Teil Nr.*	Cantidad *Quantité* *Quantity* *Quantität*	
28	20.11101.00	1	(1)
29	104.06000.66	1	
30	701.06000.66	1	
31	00.09034.00	1	
32	14.11430.10	1	
33	603.10020.86	4	
34	104.10000.66	4	
35	112.08000.66	4	
36	00.09032.10	1	
37	00.09032.11	1	
38	02.02926.01	1	
39	603.08020.86	1	
40	104.08000.66	1	
41	701.08000.66	1	
42	31.01331.00	2	
43	31.01329.00	2	

Instalación eléctrica

Installation electrique

Electric installation

Electroanlage

Tablier alumbrado
Tableau eclairage
Lighting Panel
Leuchtspretzwand
HATZ

A partir del nºbastidor:
From chassis nr.:
(1) 116.29777

Fig. Nº *Fig. Nº* *Fig. Nº* *Bild Nr.*	Referencia *Reference* *Part Nº* *Teil Nr.*	Cantidad *Quantité* *Quantity* *Quantität*
1A	40.92200.00	1
1B	09.09231.01	1 (1)
1	09.00922.05	1
2	09.00923.06	1
3	46.50028.00	2
4	46.50021.01	1 (1)
5	46.50021.07	1 (1)
6	01.00823.03	1
7	43.50022.01	1
8	45.50021.02	1 (1)
9	630.06015.96	6
10	46.50029.00	3
11	43.50024.01	1
12	45.50032.00	11

Fig. Nº *Fig. Nº* *Fig. Nº* *Bild Nr.*	Referencia *Reference* *Part Nº* *Teil Nr.*	Cantidad *Quantité* *Quantity* *Quantität*
13	01.00877.00	1
14	43.50025.00	1
15	09.70034.00	1
16	43.50023.00	1
17	43.50026.00	1
18	01.00844.13	1
19	58.15340.00	1
20	43.50022.02	1
20/1	43.50080.00	2 (1)
20/2	43.50022.03	2 (1)

A - Conjunto tablier
B - Conjunto tapa

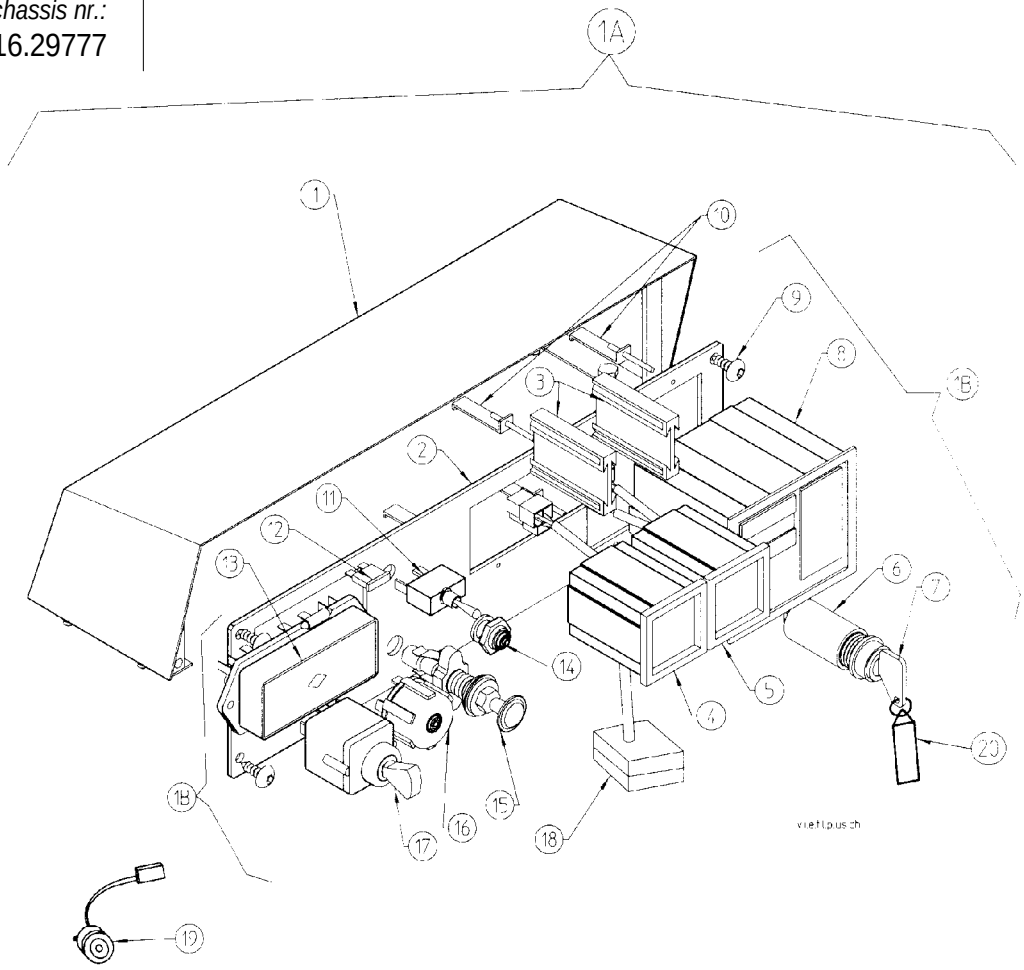

Instalación eléctrica

Installation electrique

Electric installation

Electroanlage

Arranque PERKINS
Demarrage PERKINS
Starting elec. PERKINS
Electrische Anlage PERKINS

A partir del nºbastidor:
From chassis nr.:

(1) 936.28451
(2)936.34548

Fig. Nº *Fig. Nº* *Fig. Nº* *Bild Nr.*	Referencia *Reference* *Part Nº* *Teil Nr.*	Cantidad *Quantité* *Quantity* *Quantität*
1	09.92400.01	1 KIT
2	43.10621.00	1
3	02.01223.00	1
4	09.02124.00	1
5	09.02123.00	1
6	01.00855.00	1
7	09.01501.01	1
8	603.08025.86	2
9	00.09034.00	1
10	603.08015.86	1
11	20.11101.00	1 (1)
12	104.08000.66	1
13	701.08000.66	1

Fig. Nº *Fig. Nº* *Fig. Nº* *Bild Nr.*	Referencia *Reference* *Part Nº* *Teil Nr.*	Cantidad *Quantité* *Quantity* *Quantität*
14	00.09035.01	1
15	01.00841.02	1
16	46.10002.00	1
17	15.01444.00	1
18	02.01926.02	1 (2)
19	45.04113.11	1
20	43.01530.11	1
21	810.00000.00	1
22	09.02127.00	1
23	09.02126.00	1
24	09.02128.00	1
25	09.02129.00	1

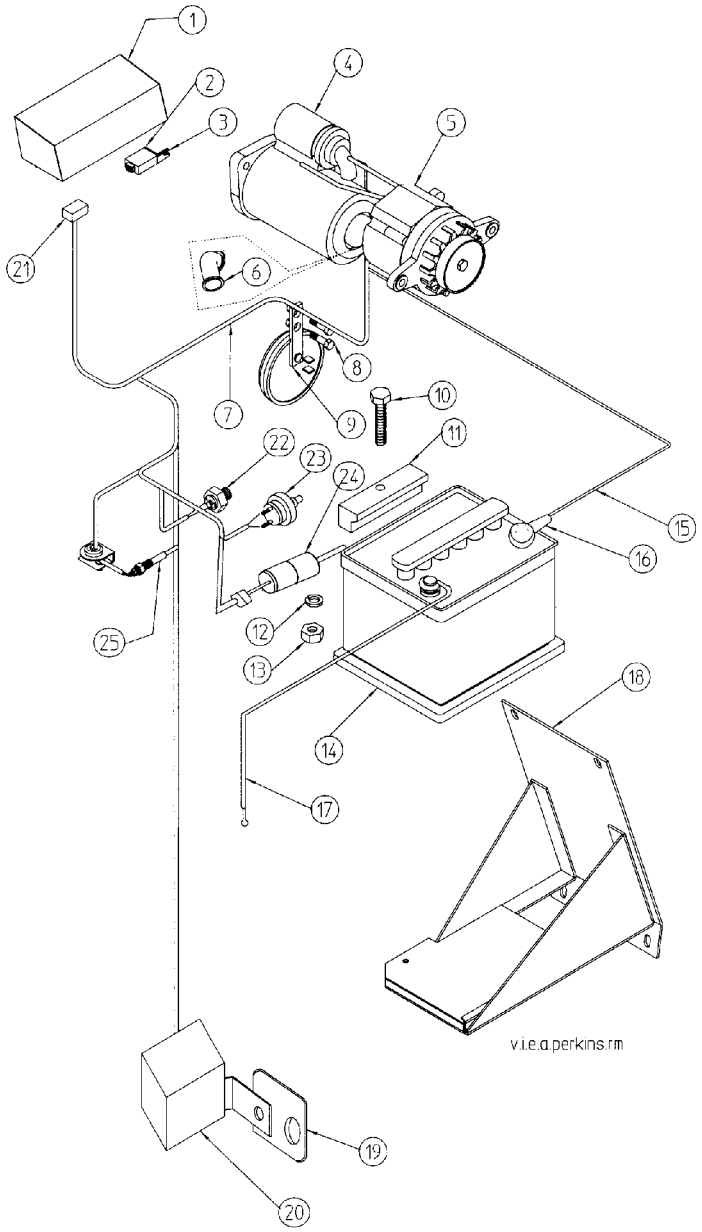

Instalación eléctrica

Installation electrique

Electric installation

Electroanlage

Tablier arranque
Tableau démarrage
Starting panel
Anlassspritzwand

PERKINS

A partir del nºbastidor:
From chassis nr.:

(1) 116.29777

Fig. Nº *Fig. Nº* *Fig. Nº* *Bild Nr.*	Referencia *Reference* *Part Nº* *Teil Nr.*	Cantidad *Quantité* *Quantity* *Quantität*
1	09.92400.01	1 KIT
2	09.00922.01	1
3	630.06015.96	4
4	09.09240.01	1 KIT
5	01.00796.00	1
6	01.00823.03	1
7	43.50022.01	1
7/1	43.50080.00	2 (1)
7/2	43.50022.03	2 (1)
8	43.50032.00	1
9	43.50024.01	1
10	43.50025.00	1
11	46.50021.03	1

Fig. Nº *Fig. Nº* *Fig. Nº* *Bild Nr.*	Referencia *Reference* *Part Nº* *Teil Nr.*	Cantidad *Quantité* *Quantity* *Quantität*
12	43.50038.00	1
13	46.50028.00	1
14	01.00877.00	1
15	46.50029.00	2
16	09.00940.00	1
17	09.01242.01	1 KIT
18	43.50041.00	5

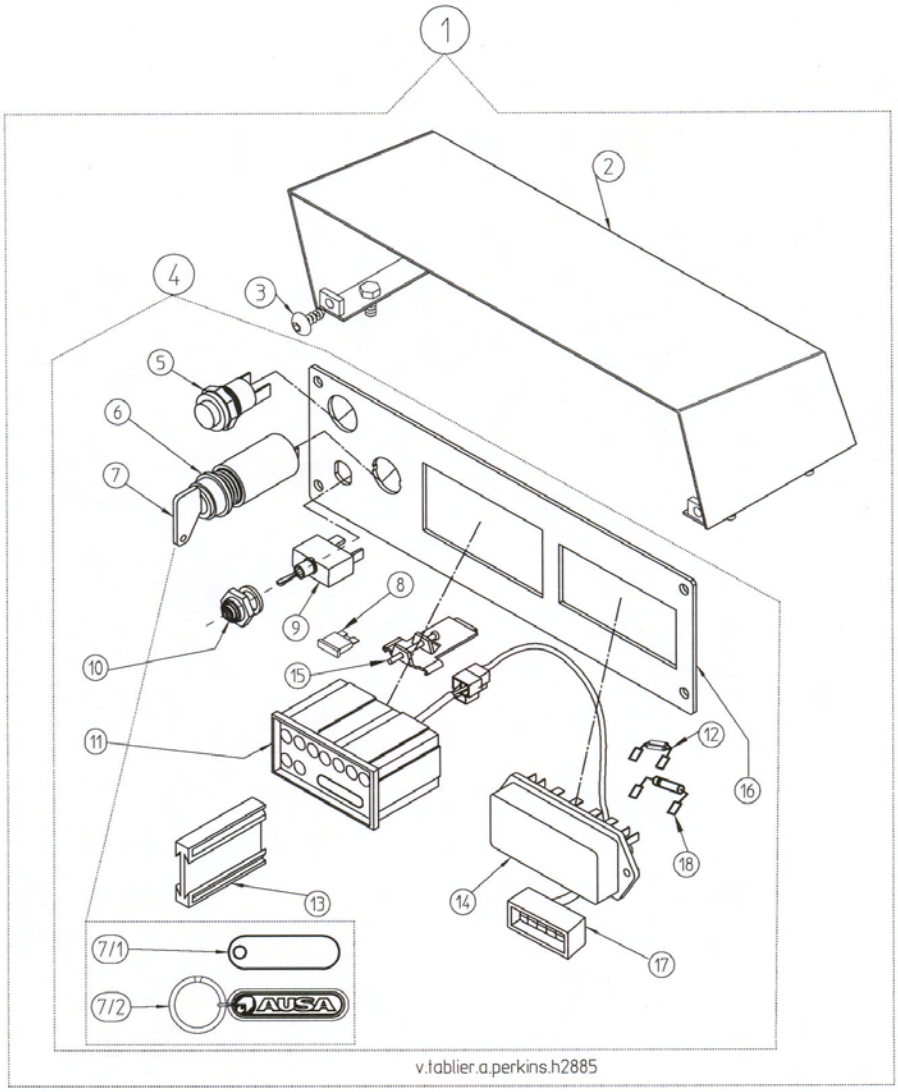

Instalación eléctrica

Installation electrique

Electric installation

Electroanlage

Instalación eléctrica alumbrado
Equipement electrique eclairage
Lighting Installation
Elektrische Leuchtanlage

PERKINS

A partir del nºbastidor:
From chassis nr.:

(1) 936.28451

(2) 936.34548

Fig. Nº *Fig. Nº* *Fig. Nº* *Bild Nr.*	Referencia *Reference* *Part Nº* *Teil Nr.*	Cantidad *Quantité* *Quantity* *Quantität*
1	09.92500.01	1 KIT
2	16.01449.13	1
3	54.01327.00	2
4	16.01449.12	1
5	46.10754.00	1
6	46.10755.00	1
7	46.01324.00	1
8	37.01242.12	1
9	43.10621.00	1
10	02.01223.00	1
11	603.06015.86	2
12	00.09034.00	1
13	701.06000.66	1
14	37.01501.02	1
15	01.00809.00	1
16	09.00328.00	1
17	603.10020.86	4
18	15.01444.00	1
19	104.10000.66	4
20	112.08000.66	4
21	14.11430.10	1
22	31.01329.00	2
23	31.01331.00	2

Fig. Nº *Fig. Nº* *Fig. Nº* *Bild Nr.*	Referencia *Reference* *Part Nº* *Teil Nr.*	Cantidad *Quantité* *Quantity* *Quantität*
24	00.09032.11	1
25	00.09032.10	1
26	603.08020.86	1
27	02.02926.01	1
28	701.08000.66	1
29	02.01926.02	1 (2)
30	00.09035.01	1
31	701.06000.66	1
32	20.11101.00	1 (1)
33	603.06030.86	1
34	01.00841.02	1
35	09.02126.00	1
36	09.02127.00	1
37	09.02129.00	1
38	09.02128.00	1
39	43.01530.01	1
40	09.02123.00	1
41	09.02124.00	1
42	45.04113.11	1
43	603.05015.86	1
44	709.14000.66	1
45	08.11180.03	1
46	08.11180.02	1

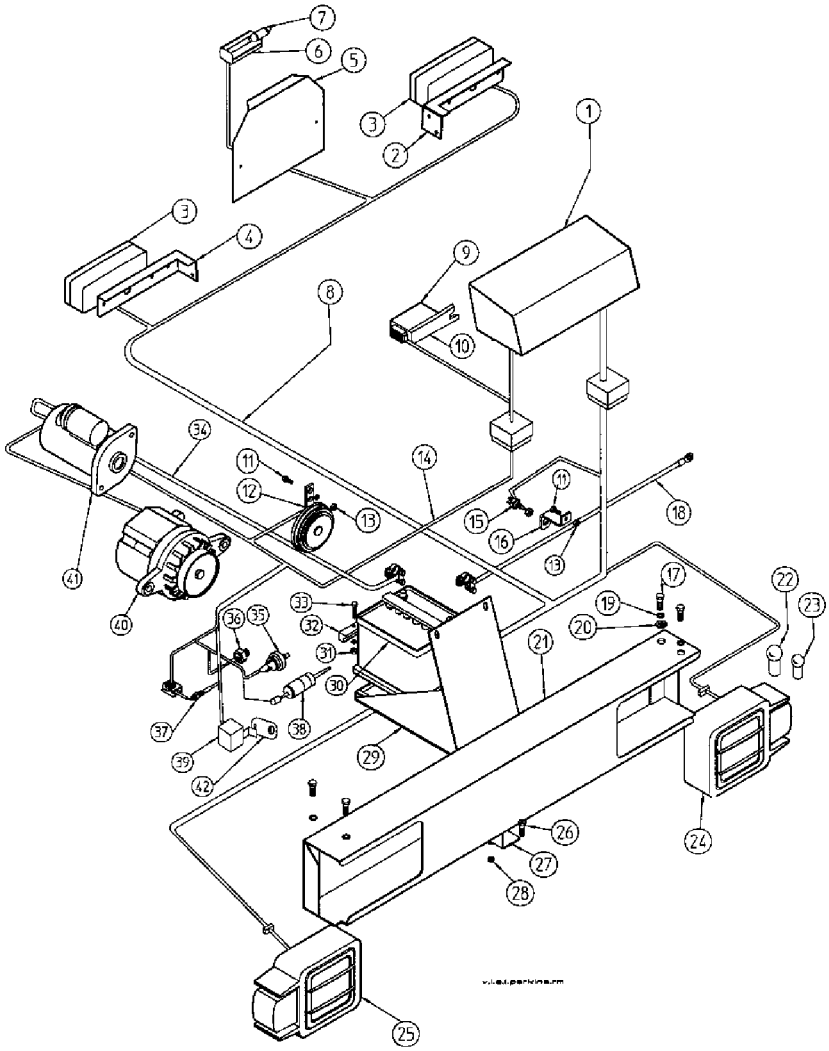

Instalación eléctrica

Installation electrique

Electric installation

Electroanlage

Tablier alumbrado PERKINS
Tableau eclairage PERKINS
Lighting Panel PERKINS
Leuchtspretzwand PERKINS

A partir del nºbastidor:
From chassis nr.:

(1) 116.29777

Fig. Nº *Fig. Nº* *Fig. Nº* *Bild Nr.*	Referencia *Reference* *Part Nº* *Teil Nr.*	Cantidad *Quantité* *Quantity* *Quantität*
1	09.92500.01	1 KIT
2	09.00922.05	1
3	630.06015.96	4
4	09.09250.01	1 KIT
5	09.00925.01	1
6	09.70034.00	1
7	43.50032.00	1
8	46.50029.00	11
9	01.00823.03	1
10	43.50022.01	1
10/1	43.50080.00	2 (1)
10/2	43.50022.03	2 (1)
11	43.50022.02	1

Fig. Nº *Fig. Nº* *Fig. Nº* *Bild Nr.*	Referencia *Reference* *Part Nº* *Teil Nr.*	Cantidad *Quantité* *Quantity* *Quantität*
12	46.50021.04	1
13	46.50021.07	1
14	43.50025.00	1
15	46.50024.01	2
16	46.50026.00	1
17	43.50023.00	1 KIT
18	01.00877.00	1
19	46.50028.00	2
20	09.01243.01	1

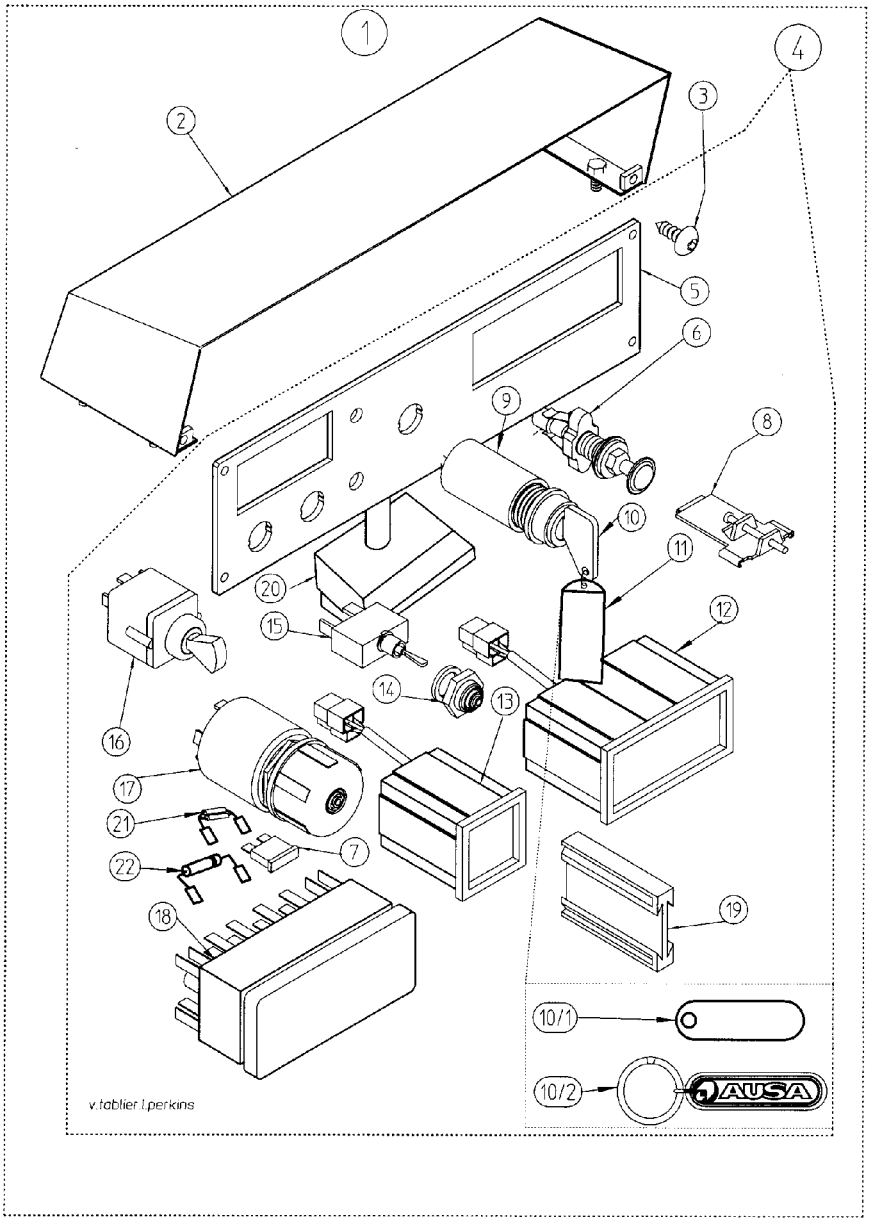

Instalación eléctrica

Installation electrique

Electric installation

Electroanlage

Faro giratorio
Girophare
Rotating Beacon
Drehscheinwerfer

A partir del nºbastidor:
From chassis nr.:

(1) 092.36277

Fig. Nº *Fig. Nº* *Fig. Nº* *Bild Nr.*	Referencia *Reference* *Part Nº* *Teil Nr.*	Cantidad *Quantité* *Quantity* *Quantität*
1	01.00921.00	1 (1)
2	01.00923.00	1
3	601.06015.86	3 (1)
4	101.06000.66	3
5	711.06000.66	3
6	01.00939.00	1
7	21.00161.00	2
8	16.00760.00	1
9	43.50024.01	1

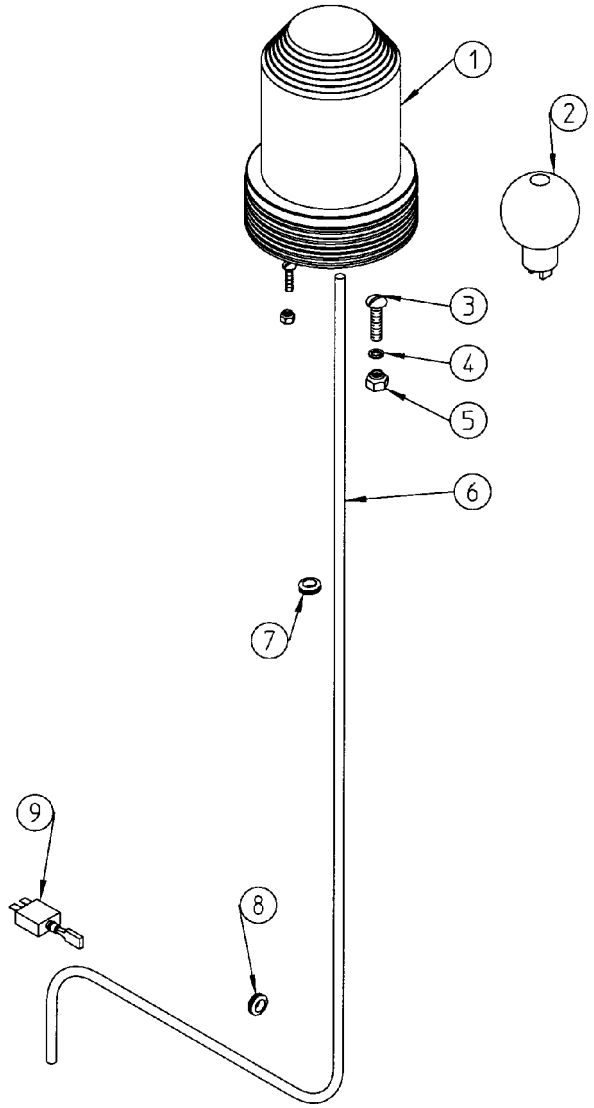

v.faro.rotativo

Instalación eléctrica

Installation electrique

Electric installation

Electroanlage

Avisador acústico
Avertisseur acoustique
Acoustic warning
Akustische Verwarnung

Tabla a partir del nºbastidor:
List From chassis nr.:
092.33917
(1) 559.37063

Fig. Nº *Fig. Nº* *Fig. Nº* *Bild Nr.*	Referencia *Reference* *Part Nº* *Teil Nr.*	Cantidad *Quantité* *Quantity* *Quantität*
1	02.14110.01	1 (1)
2	02.14112.00	1
3	45.01525.00	1
4	02.14113.01	1
5	832.00001.00	1
6	107.14000.10	1

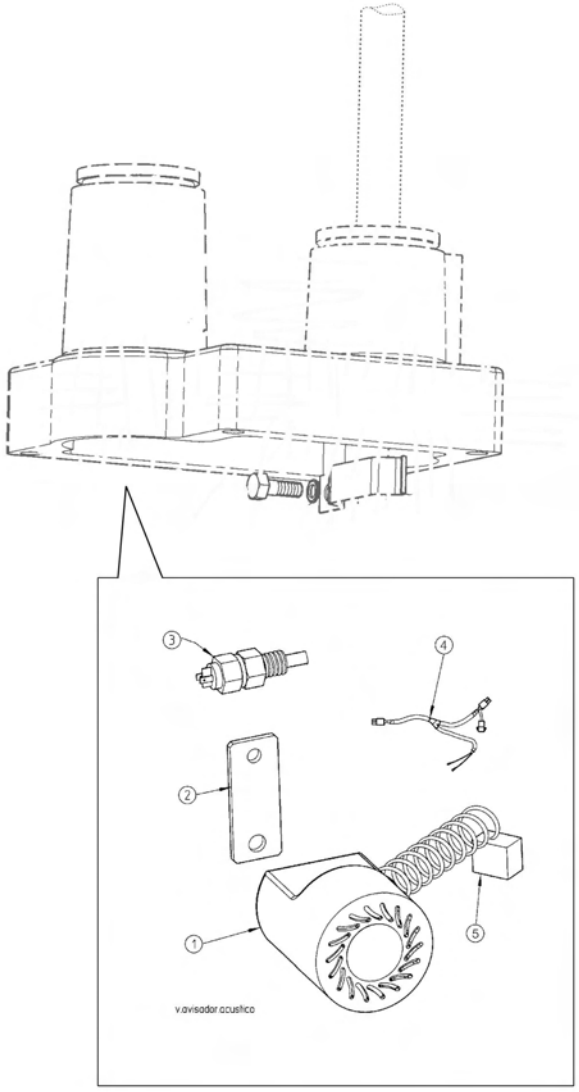

1

2

3

4 — 3 bar 01.01356.03

5 — 2´2 bar 01.01356.04

6 — 500 RMX

7 — plus

8 — Antes de abandonar el vehículo, debe ponerse la tolva en su posición inicial de transporte.

9 — No accionar el inversor con la máquina en movimiento / Ne pas actionner l'inverseur si le vehicle n'est pas arreté / Don´t use the reverse if the vehicle isn't completely stopped / Wendegetriebe nur bei stehendem Fahrzeug schalten

10 — ENGINE OIL SAE 20W/40 API-CD-CE-CF4 / MOTOR-MOTEUR-ENGINE SAE 20W/40 API-CD-CE-CF4

11 — DIN 51524 VG 46 68.01352.30

12 — ¡Peligro! Está prohibido permanecer en la zona de maniobra de la máquina.

13

14

15

16

17

18

19

20 — STOP

21 — MUY IMPORTANTE / TRES IMPORTANT / Anverso / MOST IMPORTANT / ACHTUNG / Reverso

22 — ATENCION No utilice esta máquina sin estar autorizado y conocer perfectamente su funcionamiento

23 — WARNING Do not attempt to use this machine without authorization and without knowing fully how the machine works

24 — ATTENTION Ne pas utiliser cette machine sans en être autorisé et sans en connaître parfaitement son fonctionnement

25 — ACHTUNG Nur von Befugten, nach gründlicher Einarbeitung und Lesen der Betriebsanleitung in Betrieb nehmen

26 — DIESEL 43.01356.00

27 — 46.00625.00

29 — DIESEL

30 — ESTRUCTURA PROTECCIÓN PARA CASO DE VUELCO / ROLL OVER PROTECTIVE STRUCTURE (ROPS) 01.08236.01 1156 ES CONFORME A ISO 3471:94 / IS ACCORDING TO ISO 3471:94 APROBADA PARA MODELOS: APPROVED FOR MODELS: 150/175 RMS/500 RMX MASA MÁXIMA DE LA MÁQUINA EN VACÍO: MAXIMUM MASS OF THE UNLOADED MACHINE: 1.500 kg AUTOMOVILES UTILITAROS, S.A. - Tel. +34 93 874 73 11

31/31A

32

33

34

Acabados
Finition
Finishing
Wollendung

Placas
Plaques
Plates
Platte

A partir del nºbastidor:
From chassis nr.:

(1) 141.29720
(2) 097.28167 HATZ-PERKINS
(2) 092.29719 LKS
(3) 154.40582

Fig. Nº *Fig. Nº* *Fig. Nº* *Bild Nr.*	Referencia *Reference* *Part Nº* *Teil Nr.*	Cantidad *Quantité* *Quantity* *Quantität*
1	13.12136.00	1 (3)
~~2~~	~~01.00788.03~~	~~2~~ (3)
3	39.09901.00	1
4	01.01355.03	2
5	01.01355.07	2
6	09.20003.00	2
7	09.09900.00	1
8	02.00773.01	1
9	01.01354.00	1
10	43.01170.03	1 (2) usa
11	43.01352.20	1
12	14.00775.01	2 (E)
12	14.00775.00	2 (D)
12	14.00775.02	2 (F)
12	14.00775.03	3 (GB)
13	45.19101.00	1
14	09.00769.00	1
15	502.03000.60	4
16		1
17	01.00779.26	2 (1)
18	01.00757.00	1
19	09.10155.00	
20	15.20010.00	1
21	01.13570.00	1
22	02.00774.00	1 (E)
23	02.00777.00	1 (GB)
24	02.00778.00	1 (F)
25	02.00779.01	1 (D)
26	43.01356.00	1
27	46.00825.00	1
28	09.12014.00	1
29	15.01525.00	1
30	39.08242.00	1
31	02.00775.01	1
31A	01.00788.05	1
32	09.15145.02	1
33	09.15145.01	1
34	09.15145.02	1

(E) ESPAÑOL
(D) DEUTSCH
(F) FRANÇAIS
(GB) ENGLISH
(P) PORTUGUÊS
(I) ITALIANO

Acabados
Acabados
Acabados
Acabados

Protector tablier
Protecteur tableau
Panel Protector
Schützer Anlassspritz

Fig. Nº *Fig. Nº* *Fig. Nº* *Bild Nr.*	Referencia *Reference* *Part Nº* *Teil Nr.*	Cantidad *Quantité* *Quantity* *Quantität*
1	46.00843.00	1
2	01.00804.01	1
3	46.00841.00	1
4	46.00842.00	1
5	60.01454.00	1
6	711.06000.66	1
7	60.01453.00	1
8	60.01454.01	1
9	711.06000.66	1
10	60.01453.00	1

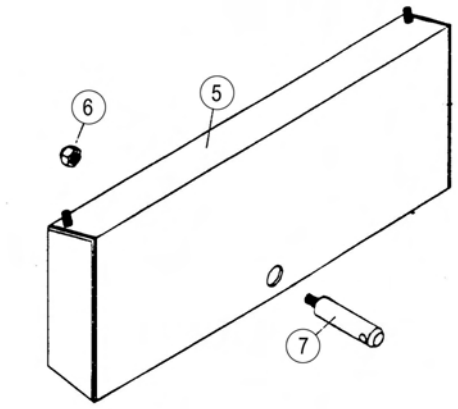

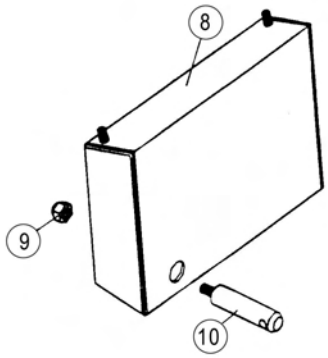

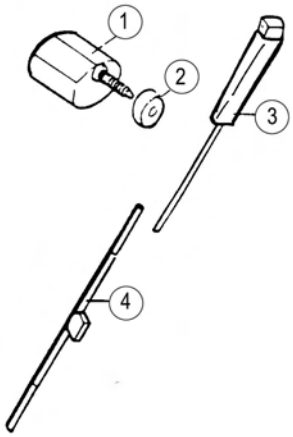

Acabados
Acabados
Acabados
Acabados

Espejo retrovisor
Miroir retroviseur
Rear-vision mirror
Rückspiegel

Fig. Nº *Fig. Nº* *Fig. Nº* *Bild Nr.*	Referencia *Reference* *Part Nº* *Teil Nr.*	Cantidad *Quantité* *Quantity* *Quantität*
1	09.11009.00	(1)
2	09.11013.00	1
3	09.11010.00	1
4	09.11011.00	1
5	09.11012.00	1

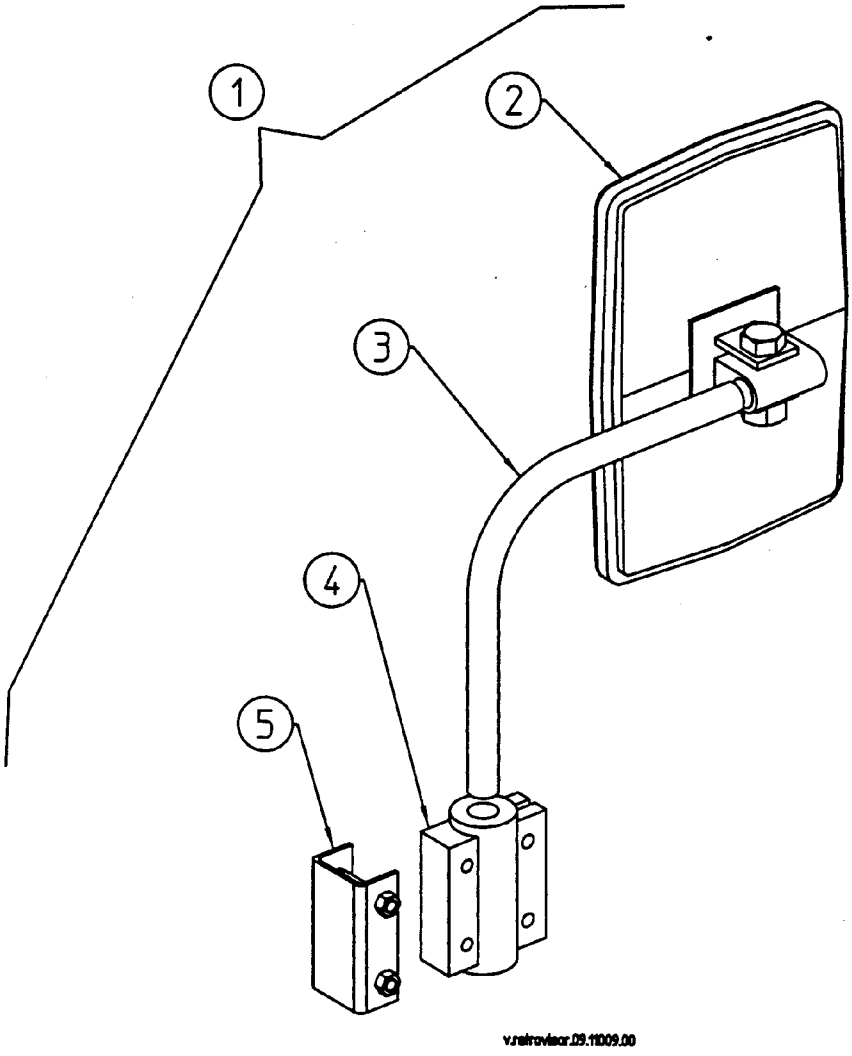

Acabados
Acabados
Acabados
Acabados

Dispositivo seguridad
Safety device

Fig. Nº *Fig. Nº* *Fig. Nº* *Bild Nr.*	Referencia *Reference* *Part Nº* *Teil Nr.*	Cantidad *Quantité* *Quantity* *Quantität*
1	60.00783.00	1
2	60.00782.00	1
3	09.00220.00	1
4	701.04000.66	2
5	615.04025.66	2
6	43.01530.00	1
7	09.01244.00	1

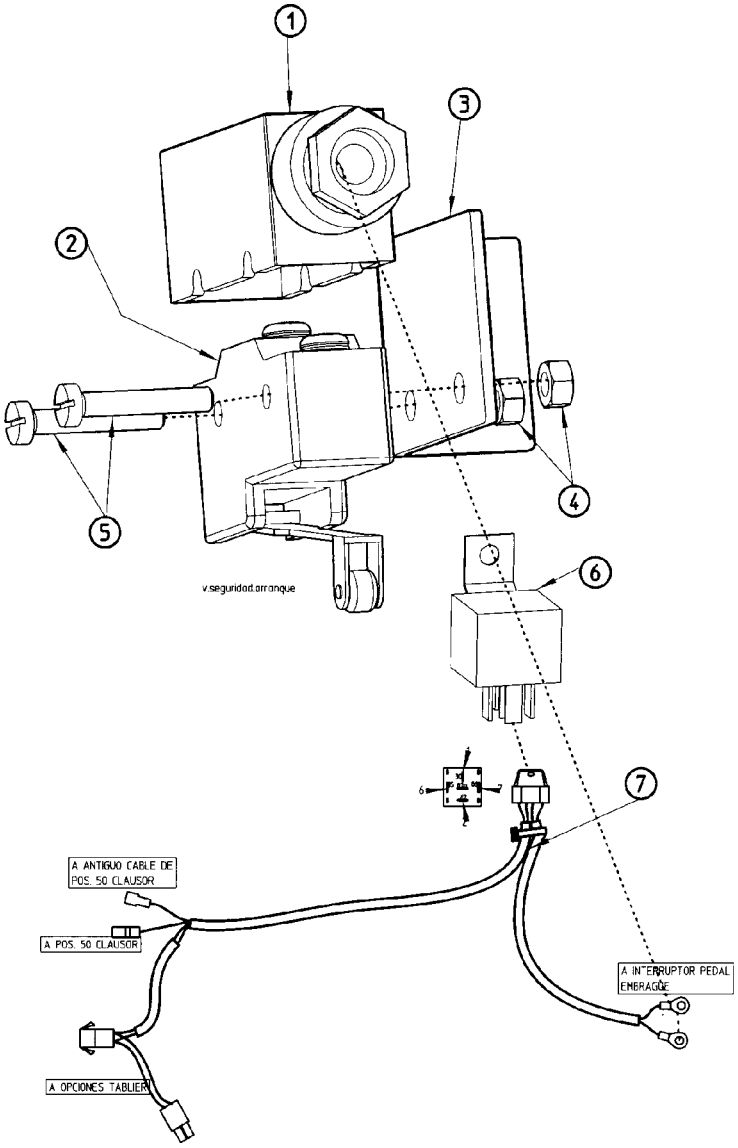

4x4 Transmisión

4x4 Transmission

4x4 Transmission

4x4 Antrieb

Puente directriz
Pont directrice
Axle Transmission
Lenkachse

A partir del nºbastidor:
From chassis nr.:

(1) 097.29725

Fig. Nº *Fig. Nº* *Fig. Nº* *Bild Nr.*	Referencia *Reference* *Part Nº* *Teil Nr.*	Cantidad *Quantité* *Quantity* *Quantität*	
1	39.10606.01	1	
2	39.10616.00	2	
3	52.00365.00	1	
4	39.10605.00	1	
5	223.02047.66	4	
6	39.10614.00	2	
7	901.08000.33	4	
8	601.08020.86	8	
9	39.10641.00	4	
9	39.10641.01	4	
10	307.20015.00	4	
11	39.10602.00	2	
12	403.06020.00	4	
13	39.10601.02	2	(1)
14	603.08030.86	14	
15	201.14602.50	1	
16	601.08040.86	8	

Fig. Nº *Fig. Nº* *Fig. Nº* *Bild Nr.*	Referencia *Reference* *Part Nº* *Teil Nr.*	Cantidad *Quantité* *Quantity* *Quantität*	
17	403.10035.00	2	
18	39.10625.00	1	
19	603.10025.96	12	
20	10.00921.00	1	
21	80.01035.01	1	
22	39.10626.00	1	
23	15.00357.00	4	
24	711.12000.66	4	
*25	39.00500.11	1	(1)
26	603.12035.86	4	
27	701.12000.66	4	
28	39.10651.00	2	(1)
29	201.04515.50	2	(1)
30	610.05010.86	6	(1)

* Kit puente 4x4

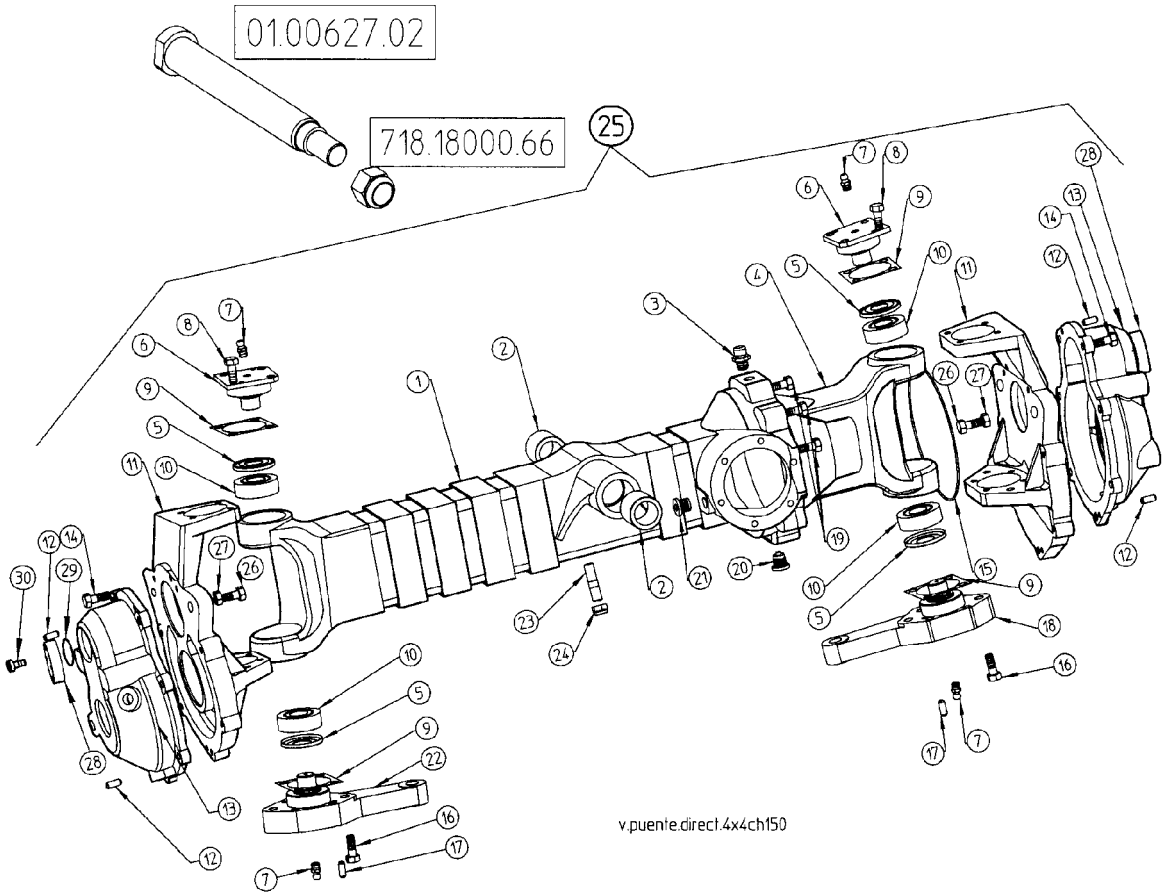

4x4 Transmisión

4x4 Transmission

4x4 Transmission

4x4 Antrieb

Transmision eje
Transmission pont
Axle Transmission
Starrachse

Fig. Nº *Fig. Nº* *Fig. Nº* *Bild Nr.*	Referencia *Reference* *Part Nº* *Teil Nr.*	Cantidad *Quantité* *Quantity* *Quantität*	Fig. Nº *Fig. Nº* *Fig. Nº* *Bild Nr.*	Referencia *Reference* *Part Nº* *Teil Nr.*	Cantidad *Quantité* *Quantity* *Quantität*
1*	39.00379.00	1	14	39.10632.00	2
2	01.00376.02	1	15	39.10630.00	2
3	39.10621.00	1	16	312.30016.00	2
4	39.10622.00	1	17	39.10611.01	2
5	01.00388.00	1	18	301.30016.00	2
6	01.00387.00	4	19	39.10631.00	2
7	01.00375.02	1	20	201.02104.50	2
8	301.40018.00	2	21	01.01302.00	1
9	301.25015.00	1	22	01.00389.00	1
10	202.02508.50	2	23	01.00380.00	1
11	201.03002.50	2	24	905.52000.00	2
12	39.10615.00	2	25	309.25015.00	1
13	202.04006.50	2			

* Corona y eje - 39.30000.00

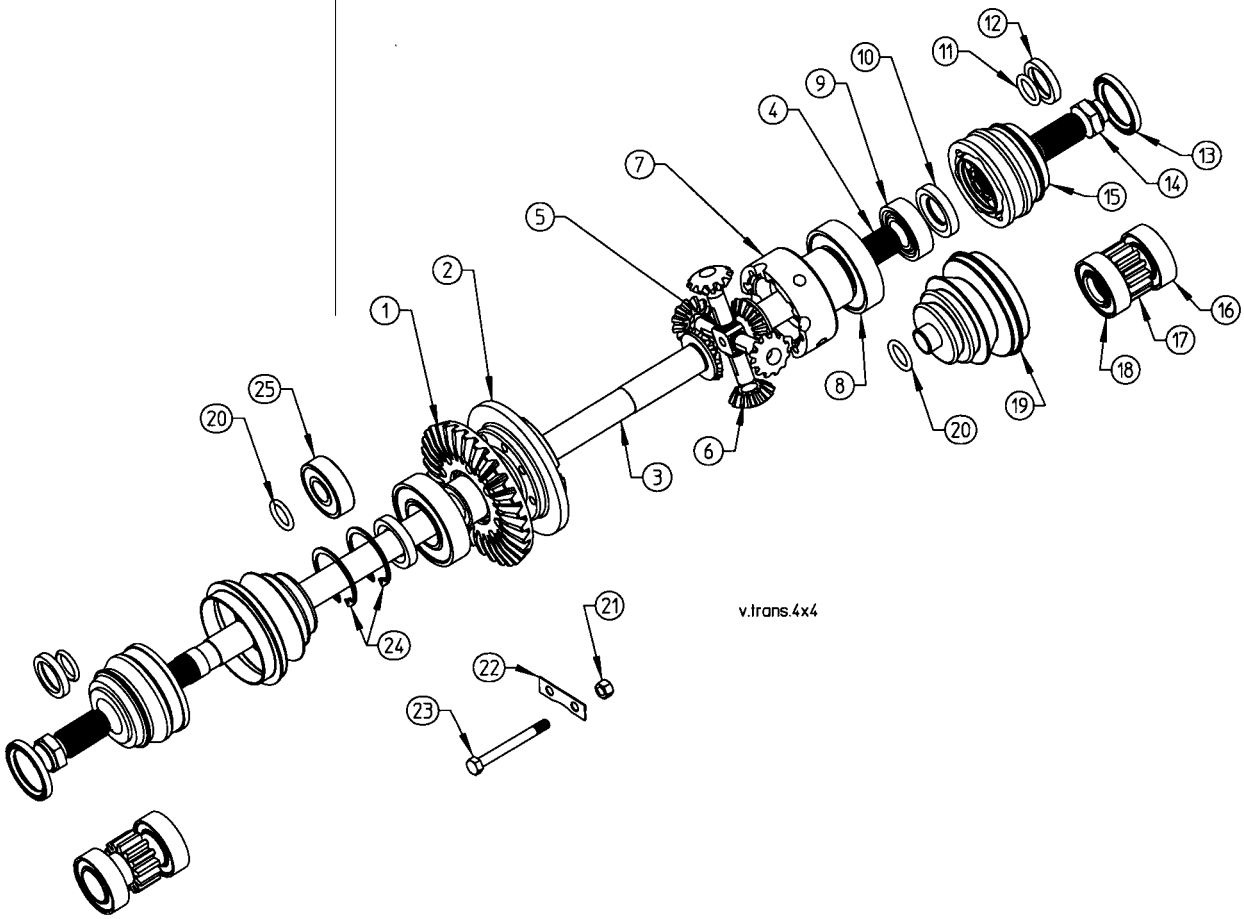

4x4 Transmisión

4x4 Transmission

4x4 Transmission

4x4 Antrieb

Transmision rueda
Transmission roue
Tyre Transmission
Rädergetriebe

A partir del nºbastidor:
From chassis nr.:
(1) 097.29725
(2) 935.31764

Fig. Nº ***Fig. Nº*** ***Fig. Nº*** ***Bild Nr.***	**Referencia** ***Reference*** ***Part Nº*** ***Teil Nr.***	**Cantidad** ***Quantité*** ***Quantity*** ***Quantität***
1	39.10628.00	2
2	39.10613.04	2 (1)
3	310.35017.00	2
4	905.72000.00	2
5	39.10612.02	2 (1)
6	312.25017.00	2
7	907.30007.00	2 (1)
8	906.30012.01	2 (1) (2)
9	202.04006.50	2
10	01.00557.00	12
11	01.00549.00	12

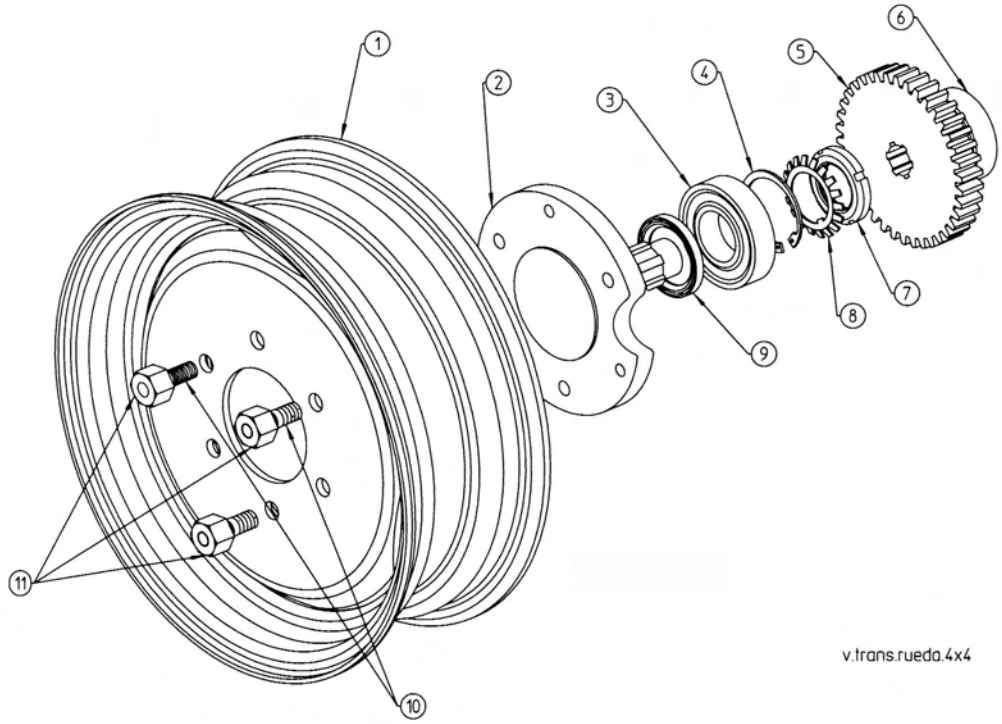

4x4 Transmisión
4x4 Transmission
4x4 Transmission
4x4 Antrieb

Cilindro dirección
Essieu directeur
Steering Cylinder
Lenkungszylinder

Fig. Nº *Fig. Nº* *Fig. Nº* *Bild Nr.*	Referencia *Reference* *Part Nº* *Teil Nr.*	Cantidad *Quantité* *Quantity* *Quantität*
1	39.00617.12	1
2	01.00617.09	1
3	10.09101.01	2
4	912.32050.66	4
5	00.05806.01	2
6	45.01492.00	2
7	01.06171.00	1
8	01.06172.00	2

Fig. Nº *Fig. Nº* *Fig. Nº* *Bild Nr.*	Referencia *Reference* *Part Nº* *Teil Nr.*	Cantidad *Quantité* *Quantity* *Quantität*
9	39.10624.01	1
10	01.06173.01	1
11	39.10623.01	1
12	229.02228.50	2
13	228.02230.50	2
14	201.03335.50	2
15	207.04032.50	1
16	11.99130.01	1

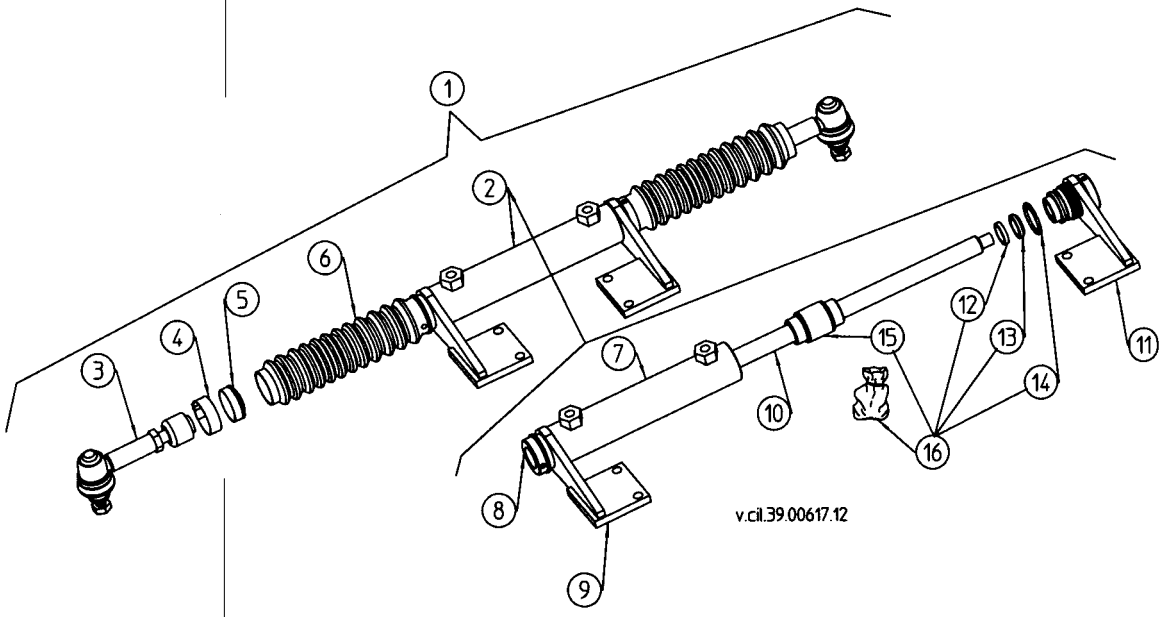

4x4 Transmisión
4x4 Transmission
4x4 Transmission
4x4 Antrieb

Piñón ataque
Pignon
Drive Pinion
Antriebsritzel

Fig. Nº *Fig. Nº* *Fig. Nº* *Bild Nr.*	Referencia *Reference* *Part Nº* *Teil Nr.*	Cantidad *Quantité* *Quantity* *Quantität*
1	39.10619.00	1
2	39.10620.00	1
3	604.08080.86	1
4	307.35018.00	2
5	907.35008.00	1
6	216.03007.50	1
7	906.35000.00	1
*8	39.10618.00	1
9	39.10640.00	1
10	201.07002.50	2 (114.27723)

* Corona y eje - 39.30000.00

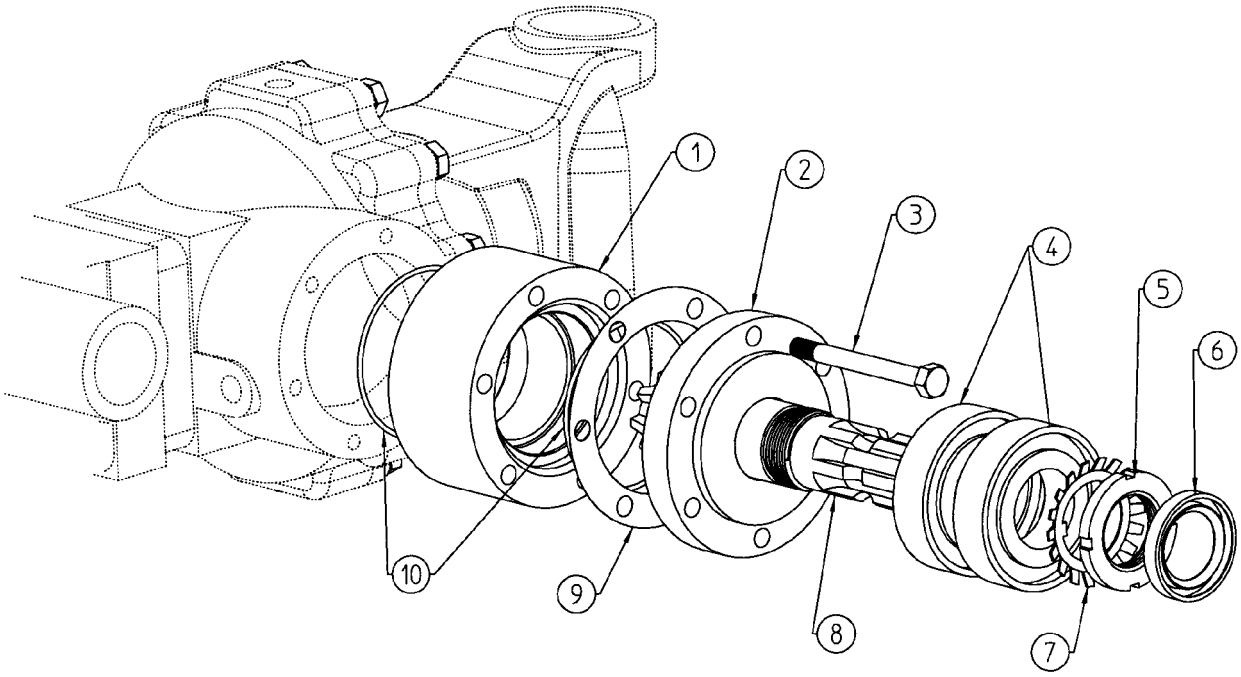

v.p.ataque.4x4

4x4 Transmisión

4x4 Transmission

4x4 Transmission

4x4 Antrieb

Kit Desconector
Kit Deconnector
Disconnector kit
Ausrückmechanismus gruppe

Fig. Nº *Fig. Nº* *Fig. Nº* *Bild Nr.*	Referencia *Reference* *Part Nº* *Teil Nr.*	Cantidad *Quantité* *Quantity* *Quantität*
1	10.03210.00	1
2	15.00435.01	4
3	104.10000.66	4
4	701.10000.66	4
5	10.00921.00	1

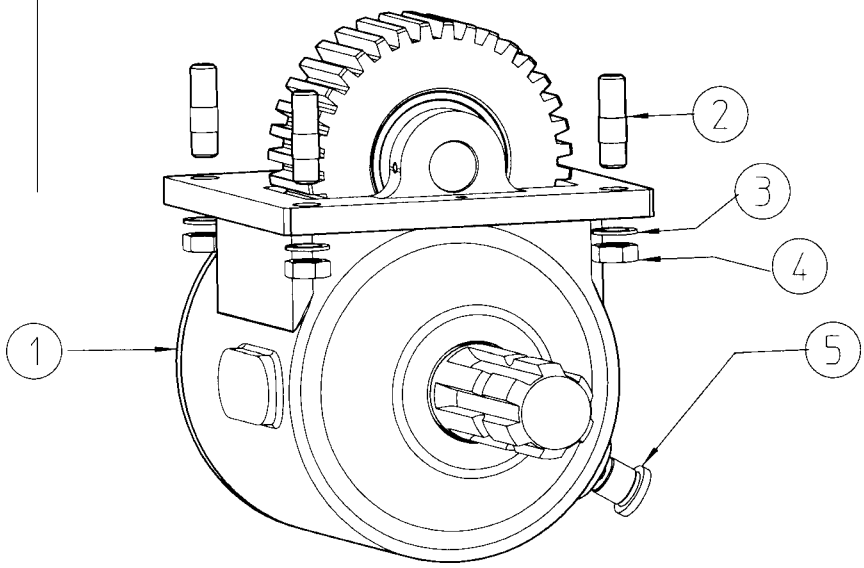

v.10.03210.00

4x4 Transmisión

4x4 Transmission

4x4 Transmission

4x4 Antrieb

Desconector
Deconnector
Disconnector
Ausrückmechanismus

Fig. Nº *Fig. Nº* *Fig. Nº* *Bild Nr.*	Referencia *Reference* *Part Nº* *Teil Nr.*	Cantidad *Quantité* *Quantity* *Quantität*
1	10.03103.00	1
2	101.20000.66	2
3	301.20015.00	2
4	10.03104.01	1
5	402.04040.00	2
6	618.06010.86	1
7	10.03204.00	1
8	201.09515.50	1
9	10.03203.00	1
10	237.6000650	1
11	237.95006.50	1
12	315.65018.00	1
13	301.20014.00	1
14	10.03201.00	1
15	10.03212.00	6
16	10.03207.00	1
17	10.03211.00	4
18	10.03209.00	4
19	10.03202.00	1
20	10.03206.00	1
21	301.35017.00	1
22	216.03510.50	1
23	10.03208.00	1
24	403.06012.80	1
25	10.03205.00	1

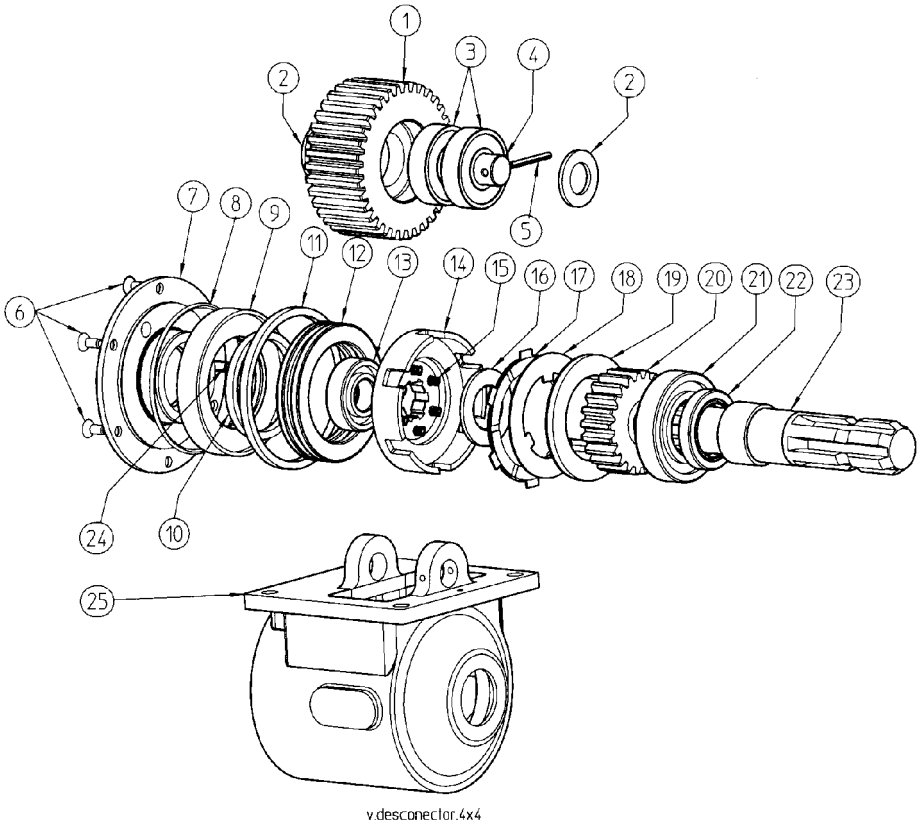

4x4 Transmisión

4x4 Transmission

4x4 Transmission

4x4 Antrieb

Tapa desconector
Couvercle deconnector
Disconnector Cover
Ausrückmechanismus -Decke

Fig. Nº *Fig. Nº* *Fig. Nº* *Bild Nr.*	Referencia *Reference* *Part Nº* *Teil Nr.*	Cantidad *Quantité* *Quantity* *Quantität*
1	40.30310.02	1
2	39.14141.00	1
3	101.06000.66	1
4	603.06015.86	1

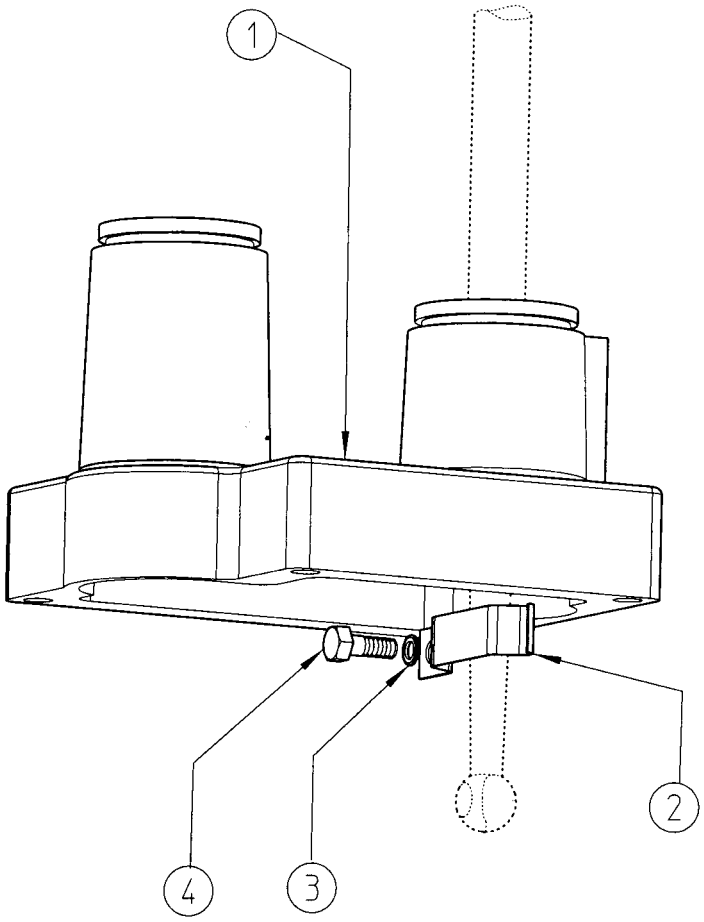

4x4 Transmisión

4x4 Transmission

4x4 Transmission

4x4 Antrieb

Soporte válvula
Support soupape
Valve support
Ventil-Unterstützung

Fig. Nº *Fig. Nº* *Fig. Nº* *Bild Nr.*	Referencia *Reference* *Part Nº* *Teil Nr.*	Cantidad *Quantité* *Quantity* *Quantität*
1	10.03300.00	1
2	10.03220.00	1
3	604.06060.86	2
4	101.06000.66	2
5	711.06000.66	2
6	02.10923.00	1

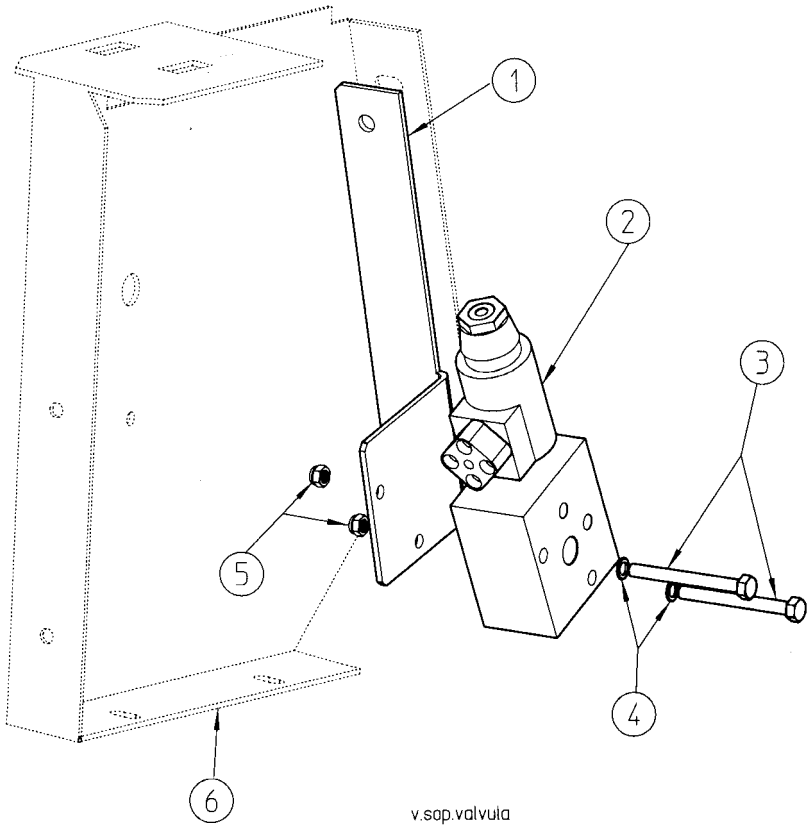

4x4 Transmisión

4x4 Transmission

4x4 Transmission

4x4 Antrieb

Instalación eléctrica
Installation electrique
Electric installation
Electrische anlage

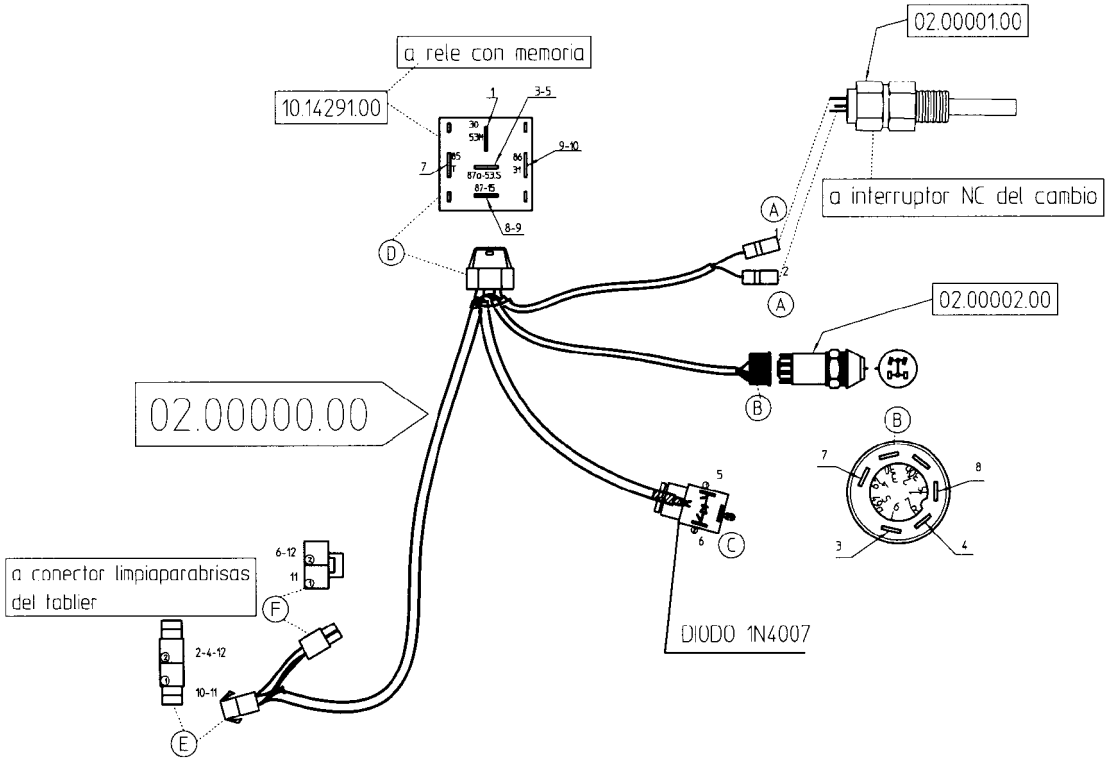

4x4 Transmisión
4x4 Transmission
4x4 Transmission
4x4 Antrieb

Junta cardán
Jointe cardan
Cardan Joint
Kardanwelle

Fig. Nº *Fig. Nº* *Fig. Nº* *Bild Nr.*	Referencia *Reference* *Part Nº* *Teil Nr.*	Cantidad *Quantité* *Quantity* *Quantität*
1	10.03113.00	1
2	10.03114.00	1
3	10.03115.00	1
4	901.08000.33	2
5	10.03126.00	2

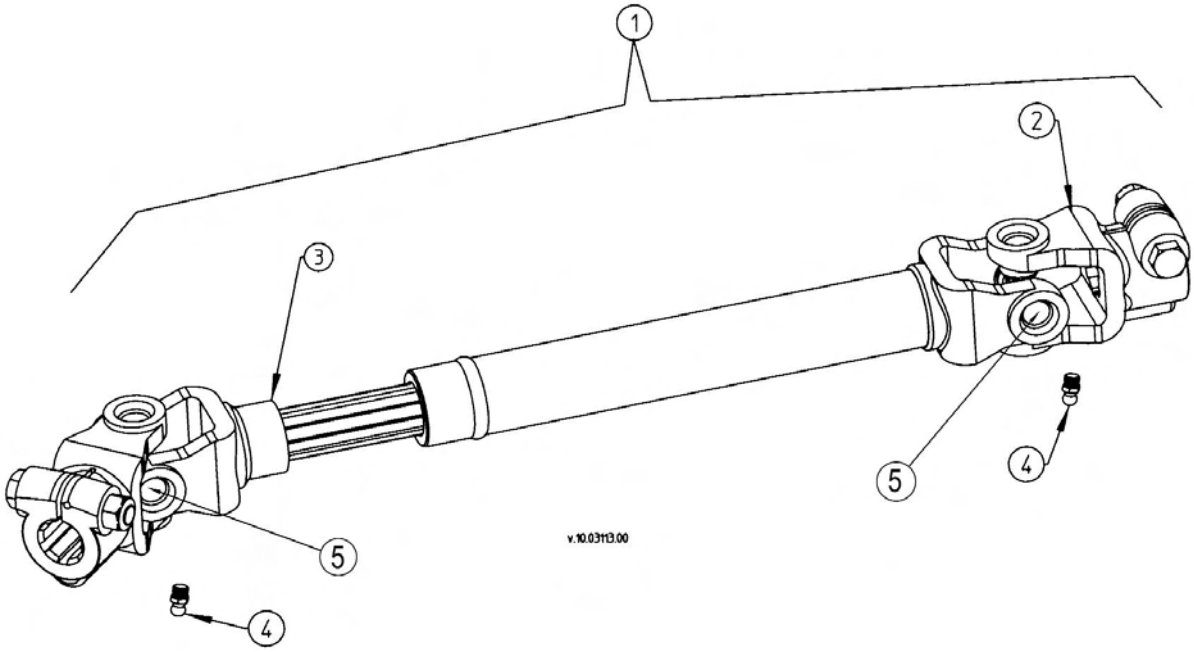

4x4
Transmisión
4x4
Transmission
4x4
Transmission
4x4 Antrieb

Topes en chasis
Heurt a chassis
Chassis Bumpers
Achsanschlag

Fig. Nº *Fig. Nº* *Fig. Nº* *Bild Nr.*	Referencia *Reference* *Part Nº* *Teil Nr.*	Cantidad *Quantité* *Quantity* *Quantität*	
1	39.00705.52	1	108-120DH
1	09.00705.52	1	150DH
2	701.14000.66	4	
3	15.00750.00	2	
4	104.14000.66	2	
5	604.14065.86	2	

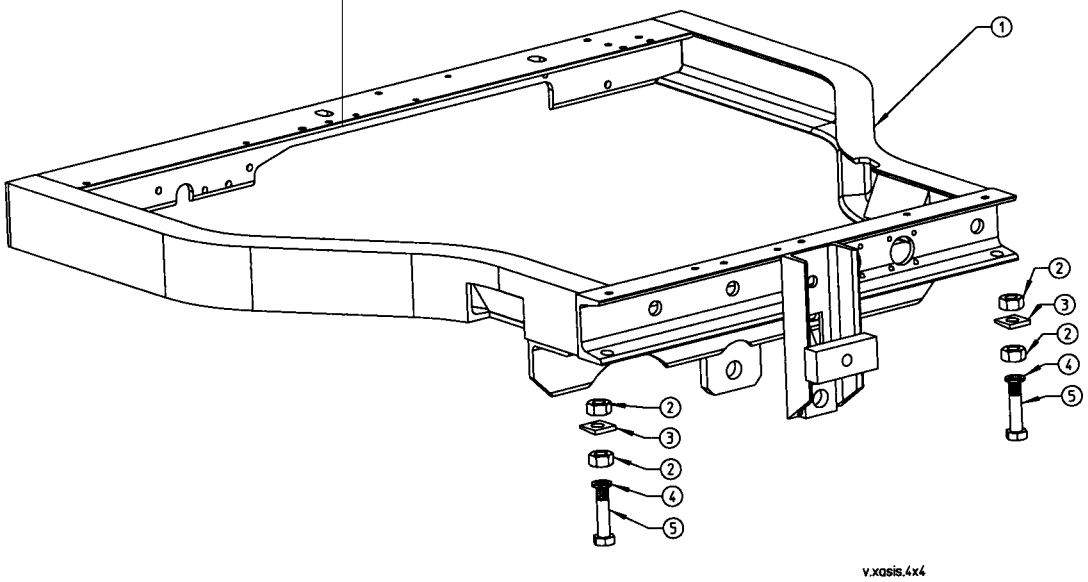

Opciones y variantes

Options et variantes

Options and variants

Möglichkeiten und Varianten

Dispositivo seguro
Appareil sécurité
Safety device
Sicherheit-Gerät

Fig. Nº *Fig. Nº* *Fig. Nº* *Bild Nr.*	Referencia *Reference* *Part Nº* *Teil Nr.*	Cantidad *Quantité* *Quantity* *Quantität*
1	630.06015.00	4
2	112.06000.66	4
3	02.14111.00	2
4	00.00588.00	2
5	43.00315.00	2
6	101.06000.66	4
7	701.06000.66	4
8	43.01530.00	1

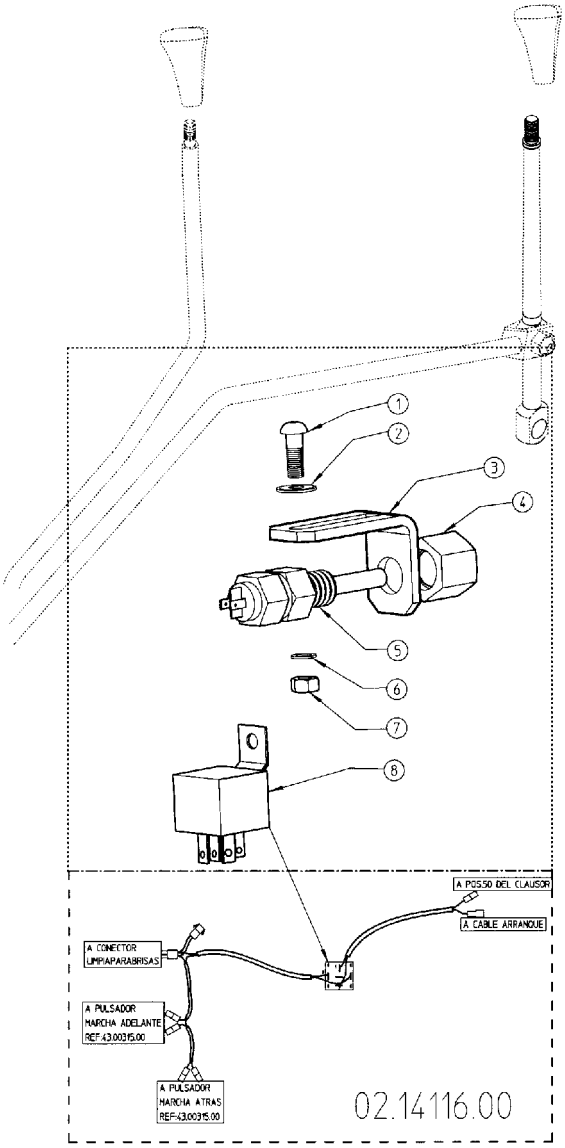

v.dispositivo.seguro.arranque.elec

Opciones y variantes

Options et variantes

Option and variants

Möglichkeiten und Varianten

Ruedas delanteras
Roues avant
Front wheels
Vorderäder

BIG FOOT

Fig. Nº *Fig. Nº* *Fig. Nº* *Bild Nr.*	Referencia *Reference* *Part Nº* *Teil Nr.*	Cantidad *Quantité* *Quantity* *Quantität*	
150/120/108 x4			
5	39.10501DE00	1	*
5	39.10501IZ00	1	**
6	39.00912.01	2	
7	15.00912.01	2	
8	16.00913.02	2	
150 DG x4			
5	45.00914DE00	1	*
5	45.00914IZ00	1	**
6	45.00912.00	2	
7	15.00912.01	2	
8	16.00913.02	2	

* Derecha / *Droite / Right / Rechts*
** Izquierda/ *Gauche / Left / Links*

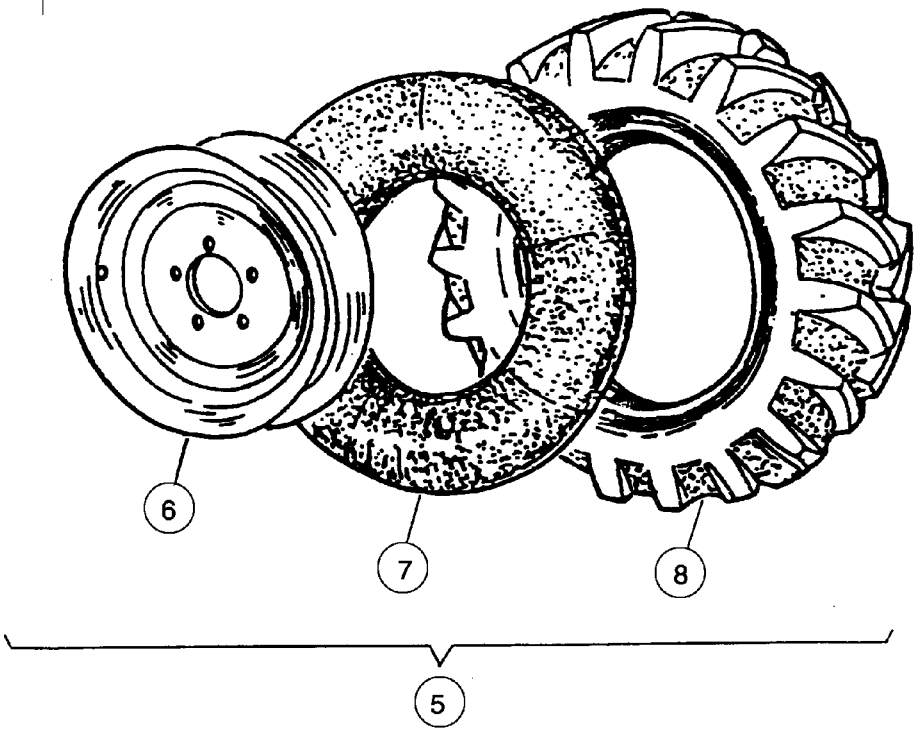

Opciones y variantes

Options et variantes

Option and variants

Möglichkeiten und Varianten

Ruedas traseras
Roues arrière
Rear wheels
Hinteräder

BIG FOOT

Fig. Nº ***Fig. Nº*** ***Fig. Nº*** ***Bild Nr.***	**Referencia** ***Reference*** ***Part Nº*** ***Teil Nr.***	**Cantidad** ***Quantité*** ***Quantity*** ***Quantität***
150/120/108 x4		
1	45.00910DE00	1 *
1	45.00910IZ00	1 **
2	45.00913.00	2
4	45.00909.00	2

* Derecha / *Droite / Right / Rechts*
** Izquierda/ *Gauche / Left / Links*

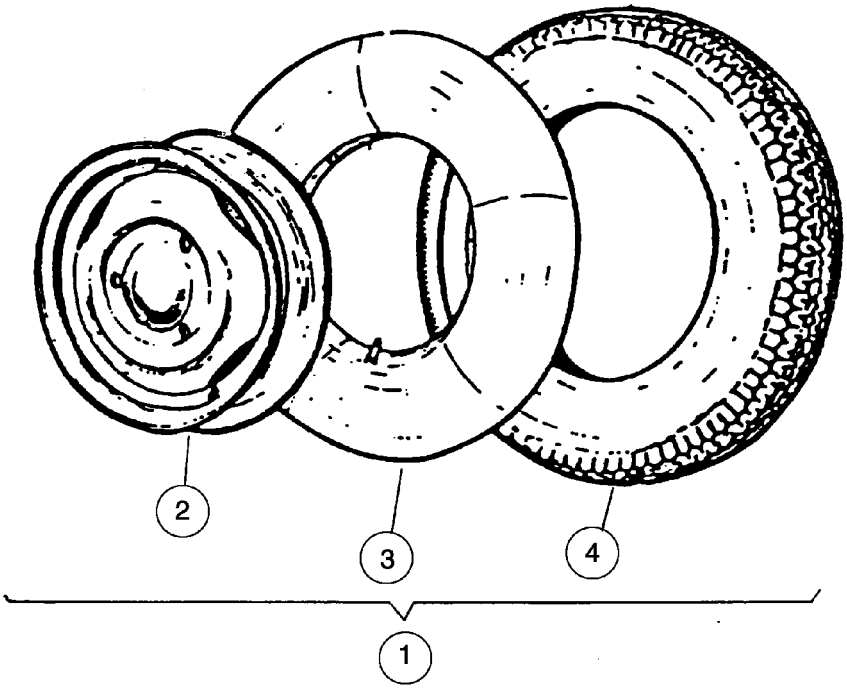

Opciones y variantes

Options et variantes

Option and variants

Möglichkeiten und Varianten

Ruedas anchas
Roues larges
Wide wheels
Breiteräder

Fig. Nº *Fig. Nº* *Fig. Nº* *Bild Nr.*	Referencia *Reference* *Part Nº* *Teil Nr.*	Cantidad *Quantité* *Quantity* *Quantität*
1	10.00587.01	10
2	45.00588.00	10
3	45.00500.02	1
4	45.00587.00	10
5	45.00587.00	10
6	01.00036.02	1
7	43.01355.01	2
8	01.01355.07	2
9	43.01355.03	2
10	01.01355.12	2

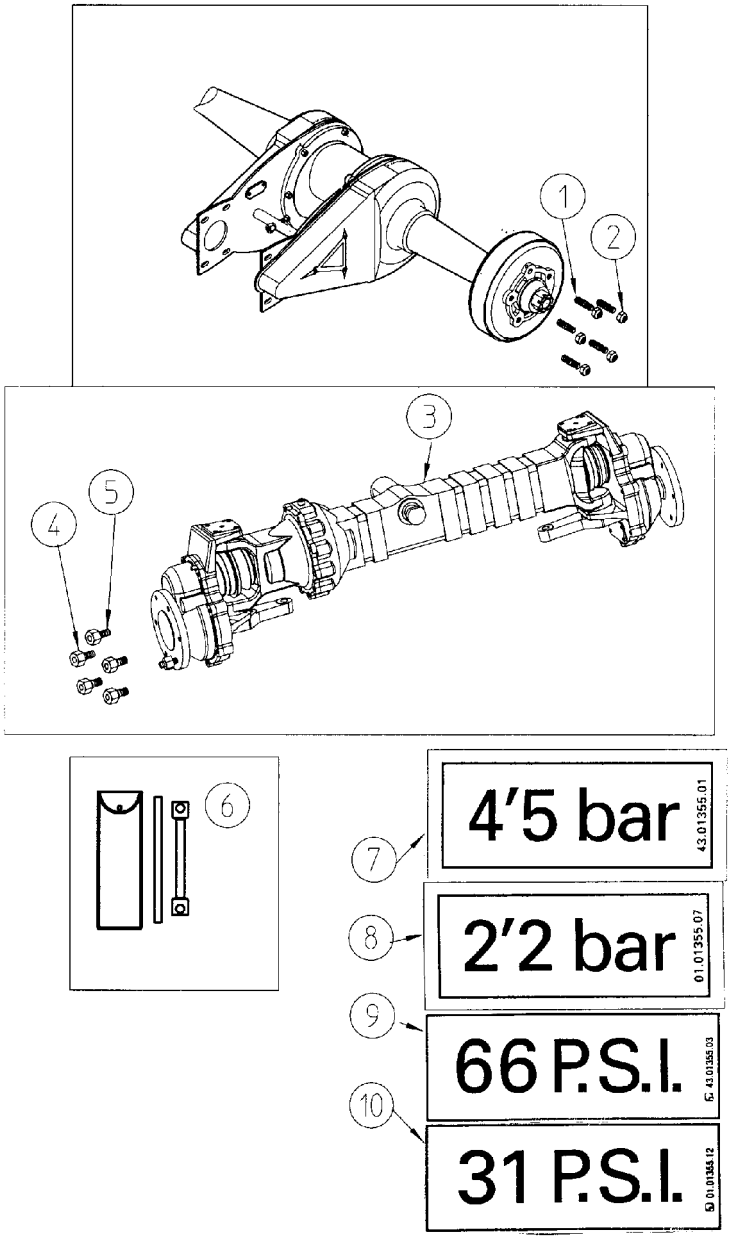

Opciones y variantes

Options and variants

Arco protector ROPS
ROPS protector

Fig. Nº *Fig. Nº*	Referencia *Part Nº*	Cantidad *Quantity*
1	01.08255.00	1

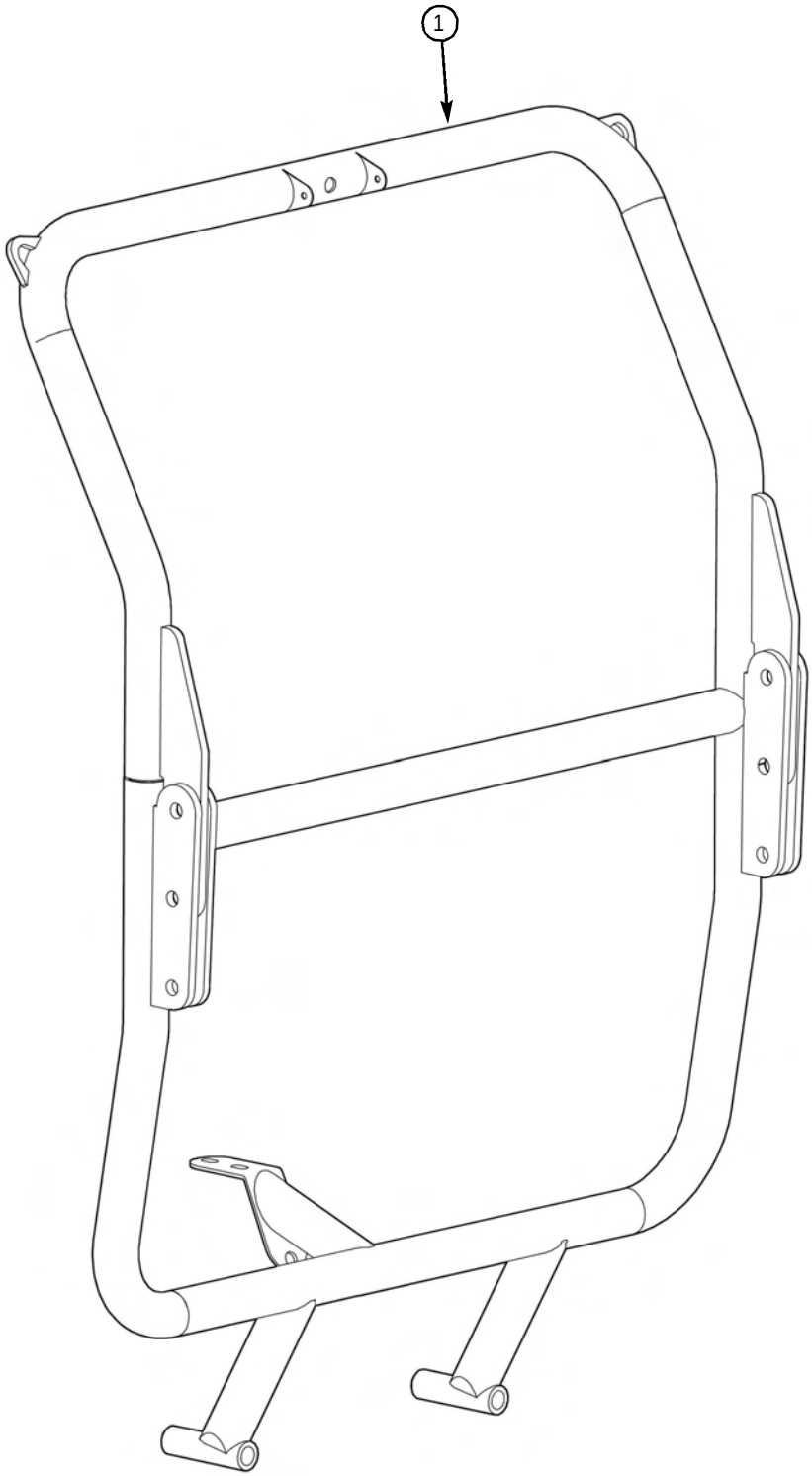

ÍNDICE DE REFERENCIAS

REFERENCES INDEX

Referencia *Reference*	Tabla *Board*	Fig. Nº *Fig. Nr*	Denominación *Denomination*	
00.00130.00	935-010-00	8	TUERCA DIN934*	NUT DIN934*
00.00184.00	935-014-00	45	ARAND. DIN434*	WASHER DIN434*
00.00326.00	935-013-00	12	GUARDAPOLVO	DUST EXCLUDER
00.00329.01	935-021-00	17		
	097-009-00	9	HORQUILLA ART.	ART. FORK
00.00382.02	935-012-02	4	ENGR. CONICO	GEAR CONICAL
00.00402.01	935-014-00	35	CADENA	CHAIN
00.00412.00	935-014-00	24	ESPAR. DIN939*	STUD DIN939*
00.00420.00	935-014-00	20	PROT. TRANS.	GUARD TRANS.
00.00422.00	935-014-00	28	TENSOR.	TENSIONER
00.00427.00	935-014-00	23	TAPA REGISTRO	COVER HANDHOLE
00.00430.00	935-014-00	22	JUNTA PAPEL REC.	PAPER GASKET
00.00587.00	935-014-00	41	ESPARRAGO DIN939*	STUD DIN939*
00.00588.00	935-014-00	42	TUERCA RUEDA	NUT DIN929*
00.00626.03	935-025-00	7	EMBELLECEDOR	TRIM
00.01307.02	935-014-00	19	EJE ROS/ROS	AXLE 'ROS/ROS'
00.02803.00	935-013-00	10	TORNILLO DIN910*	SCREW DIN910*
00.03128.00	935-011-00	32	RESORTE COMP.	SPRING COMPRESSION
00.05016.08	935-027-00	2	RUEDA	WHEEL RIM
	935-027-00	2	RUEDA	WHEEL RIM
00.05806.00	935-016-00	25	TAPON.	CAP
00.05806.01	097-004-00	5	TAPON.	CAP
00.09032.10	935-047-00	36	FARO	BEACON
	935-051-00	25	FARO	BEACON
00.09032.11	935-047-00	37	FARO	BEACON
	935-051-00	24	FARO	BEACON
00.09034.00	935-044-00	12	CLAXON	HORN
	935-047-00	31	CLAXON	HORN
	935-049-00	9	CLAXON	HORN
	935-051-00	12	CLAXON	HORN
00.09035.01	935-044-00	16	BATERIA	BATTERY
	935-047-00	20	BATERIA	BATTERY
	935-049-00	14	BATERIA	BATTERY
	935-051-00	30	BATERIA	BATTERY
01.00036.01	935-029-00	12	BOLSA HERRAMIEN.	TOOLS-BAG
01.00037.01	935-016-00	30		
01.00109.00	935-008-00	6	GRUESO REG. REC.	REGUL SPACER
01.00112.10	935-006-00	4	TIRANTE	TIE ROD
01.00113.00	935-008-00	12	RESORTE COMP.	SPRING COMPRESSION
01.00115.01	935-008-00	7	COJINETE CIL.	BEARING CYL.
01.00124.00	937-018-00	21	RESORTE COMP.	SPRING COMPRESSION
01.00133.00	937-018-00	11	TENSOR.	TENSIONER
01.00138.00	937-018-00	2	TUERCA DIN934*	NUT DIN934*
	937-018-00	12	TUERCA DIN934*	NUT DIN934*
01.00182.00	935-014-00	46	SUPLEMENTO	PANEL
01.00212.01	935-021-00	13	VARILLA FORL7	ROD L7
01.00216.00	935-021-00	10	COJINETE CIL.	BEARING CYL.
01.00220.01	935-009-00	15	RESORTE TORS.	SPRING TORSION
01.00223.00	935-021-00	5	RESORTE TRAC.	SPRING TENSION
	097-010-00	2	RESORTE TRAC.	SPRING TENSION
01.00223.01	935-022-00	3	RESORTE TRAC.	SPRING TENSION
01.00223.02	935-009-00	24	RESORTE TRAC.	SPRING TENSION
01.00225.10	935-009-00	16	TAPA REGISTRO	COVER HANDHOLE
01.00226.00	935-021-00	18	EJE CIL/CPA	AXLE 'CIL/CPA'
	097-009-00	18	EJE CIL/CPA	AXLE 'CIL/CPA'
01.00227.02	935-009-00	10	ARANDELA DIN125	WASHER DIN125
01.00235.00	935-009-00	19	SOP. ROD.	BEARING SUPPORT
01.00301.02	935-012-02	6		
01.00308.00	935-013-00	5	COJINETE NYLON	NYLON BEARING
01.00309.00	935-013-00	4	TORNILLO DIN933*	SCREW DIN933*
01.00312.01	935-013-00	18	TORNILLO DIN417*	SCREW DIN417*
01.00313.00	935-011-00	29	EJE CIL/CPA	AXLE 'CIL/CPA'
01.00314.00	935-011-00	18	EJE CIL/CPA	AXLE 'CIL/CPA'
01.00315.00	935-011-00	35	HORQUILLA ACC.	ACC. FORK
01.00316.00	935-011-00	17	HORQUILLA ACC.	ACC. FORK
01.00317.00	935-011-00	31	HORQUILLA ACC.	ACC. FORK
01.00319.00	935-011-00	16	TORNILLO DIN480*	SCREW DIN480
01.00320.00	935-011-00	36	PASADOR DIN1433	PIN DIN1433
01.00324.06	935-013-00	7	PALANCA MANDO	CONTROL LEVER
01.00325.02	935-013-00	1	EMPU\ADURA	KNOB
01.00325.03	935-013-00	6	EMPU\ADURA	KNOB
01.00326.00	935-013-00	19	RESORTE COMP.	SPRING COMPRESSION

Referencia *Reference*	Tabla *Board*	Fig. Nº *Fig. Nr*	Denominación *Denomination*	
01.00327.00	935-010-00	24	TAPON.	CAP
01.00345.00	935-010-00	6	ARANDELA DIN1441*	WASHER DIN1441*
01.00349.00	935-010-00	16	PASADOR DIN6325	
01.00350.01	935-010-00	19	TAPA SOP.	FLANGE
01.00351.04	935-010-00	15	CARCASA	CASING
01.00351.05	935-010-00	15	CARCASA	CASING
01.00353.01	935-011-00	30	EJE CAS/CIL	SHAFT 'CAS/CIL'
01.00355.00	935-011-00	20	EJE CAS/CAS	SHAFT 'CAS/CAS'
01.00356.00	935-011-00	5	ENGRANAJE z33-25	GEAR z33-26
01.00357.00	935-011-00	6	ENGRANAJE z20-15	GEAR z20-15
01.00362.00	935-011-00	23	ENGRANAJE z21-17	GEAR z21-17
01.00364.01	935-010-00	22	TAPA REGISTRO	COVER HANDHOLE
01.00365.00	935-010-00	25	TORNILLO DIN564*	SCREW DIN564*
01.00369.00	935-011-00	22	ARANDELA DIN125*	WASHER DIN125*
01.00371.01	935-010-00	18	ESPARRAGO DIN939*	STUD DIN939*
01.00375.02	097-002-00	7	CARCASA	CASING
01.00376.02	097-002-00	2	CARCASA	CASING
01.00378.01	935-010-00	10		
01.00380.00	935-012-02	17		
	097-002-00	23	TORNILLO DIN931*	SCREW DIN931*
01.00383.00	935-010-00	9	ESPARRAGO DIN939*	STUD DIN939*
01.00383.01	935-010-00	5	ESPARRAGO DIN939*	STUD DIN939*
01.00386.00	935-011-00	7	ARANDELA DIN433*	WASHER DIN443*
01.00387.00	935-012-02	2		
	097-002-00	6	ENGRANAJE z12	GEAR z12
01.00388.00	935-012-02	3		
	097-002-00	5	EJES EN CRUZ	AXLES
01.00389.00	097-002-00	22	SUPLEMENTO	PANEL
01.00393.01	935-011-00	11	TUERCA DIN547*	NUT DIN547*
01.00394.02	935-011-00	10	TUERCA DIN985*	NUT DIN985*
01.00398.00	935-012-02	16		
01.00425.00	935-014-00	29	TUERCA DIN982*	NUT DIN982*
01.00432.00	935-014-00	2	PLANCHA	PLATE
01.00500.04	935-016-00	1		
01.00502DE00	935-027-00	1		
01.00502DE01	935-027-00	1	RUEDA	WHEEL RIM
01.00502IZ00	935-027-00	1		
01.00502IZ01	935-027-00	1	RUEDA	WHEEL RIM
01.00514.01	935-024-00	18	EJE CIL/CPA	AXLE 'CIL/CPA'
	937-018-00	13	EJE CIL/CPA	AXLE 'CIL/CPA'
	935-022-00	5	EJE CIL/CPA	AXLE 'CIL/CPA'
01.00514.02	935-024-00	4	EJE CIL/CPA	AXLE 'CIL/CPA'
01.00549.00	935-016-00	26		
	097-003-00	11	TUERCA DIN934*	NUT DIN934*
01.00549.08	935-016-00	26	TUERCA RUEDA	NUT DIN929*
01.00550.08	935-016-00	22		
01.00552.02	935-016-00	19	CASQUILLO.	BUSH
01.00553.01	935-016-00	17	TUERCA CUBO	NUT DIN516*
01.00555.08	935-027-00	3	CAMARA	TUBE
	935-027-00	3	CAMARA	TUBE
01.00557.00	935-016-00	23	ESPARRAGO DIN940*	STUD DIN940*
	097-003-00	10	ESPARRAGO DIN940*	STUD DIN940*
01.00557.08	935-016-00	23	ESPARRAGO DIN939*	STUD DIN939*
01.00561.00	935-016-00	21	ANILLO DIN70951*	RING DIN70951*
01.00564.02	935-022-00	6	HORQUILLA ACC.	ACC. FORK
01.00585.08	935-027-00	4	CUBIERTA LS	TYRE 'LS'
01.00585.09	935-027-00	4	CUBIERTA TT	TYRE 'TT'
01.00617.09	097-004-00	2	CILINDRO D/E	CYLINDER D/E
01.00617.10	935-017-00	6	CILINDRO D/E	CYLINDER D/E
01.00617.11	935-017-00	1		
	935-040-00	49		
	935-041-00	41		
01.00623.00	935-016-00	7	EJE RPS/RPS	SHAFT 'RPS/RPS'
01.00625.00	935-016-00	3	COJINETE VAL. A/L	STEPPED S/L BEARING
01.00627.02	935-016-00	27	EJE CIL/ROS	AXLE 'CIL/ROS'
01.00628.00	935-016-00	5		
01.00629.00	935-016-00	4	COJINETE CIL.	BEARING CYL.
01.00632.00	935-016-00	13	ARANDELA DIN1440*	WASHER DIN1440*
01.00633.00	935-016-00	9	ARANDELA DIN7989*	WASHER DIN7989*
01.00634.00	935-016-00	8	ARANDELA DIN1440*	WASHER DIN1440*
01.00639.02	935-016-00	15		
01.00639.03	935-016-00	14		

Referencia *Reference*	Tabla *Board*	Fig. Nº *Fig. Nr*	Denominación *Denomination*	
01.00706.06	935-032-00	1	ASIENTO CONDUCT.	DRIVER'S SEAT
01.00735.00	935-028-00	9	TORNILLO DIN933*	SCREW DIN933*
01.00757.00	935-054-00	18	PLACA AD. INDI.	PLATE AD. INDI
01.00779.21	935-054-00	17	PLACA CARAC.	PLATE CHARAC.
	935-054-00	28	PLACA CARAC.	PLATE CHARAC.
01.00788.03	935-054-00	2	PLACA AD. INDI.	PLATE AD. INDI
01.00788.05	935-054-00	31A	PLACA AD. INDI.	PLATE AD. INDI
01.00796.00	935-045-00	7	PULSADOR	PUSCH BUTTOM
	935-050-00	5	PULSADOR	PUSCH BUTTOM
01.00804.01	935-031-00	21	CASQUILLO.	BUSH
	935-056-00	2	CASQUILLO.	BUSH
01.00809.00	935-051-00	15	INTERRUPTOR	SWITCH
01.00823.03	935-045-00	12	CONMUTADOR	CONMUTATOR
	935-048-00	6	CONMUTADOR	CONMUTATOR
	935-050-00	6	CONMUTADOR	CONMUTATOR
	935-052-00	9	CONMUTADOR	CONMUTATOR
01.00841.02	935-049-00	15	CABLE ELEC.	ELECTRICAL CABLE
	935-051-00	34	CABLE ELEC.	ELECTRICAL CABLE
01.00842.00	935-044-00	18	CABLE ELEC.	ELECTRICAL CABLE
	935-047-00	25	CABLE ELEC.	ELECTRICAL CABLE
01.00844.13	935-048-00	18	TRAMO I/E	LENGTH ELEC. INSTAL.
	935-045-00	13	TRAMO I/E	LENGTH ELEC. INSTAL.
01.00855.00	935-044-00	11	CASQUILLO	ACC. FORK
	935-047-00	8	CASQUILLO	ACC. FORK
	935-049-00	6	CASQUILLO	ACC. FORK
01.00877.00	935-048-00	13	CAJA.	BOX.
	935-050-00	14	CAJA.	BOX.
	935-052-00	18	CAJA.	BOX.
01.00881.00	935-044-00	8	TRAMO I/E	LENGTH ELEC. INSTAL.
	935-047-00	11	TRAMO I/E	LENGTH ELEC. INSTAL.
	935-047-00	17	TRAMO I/E	LENGTH ELEC. INSTAL.
01.00885.00	935-047-00	16	TRAMO I/E	LENGTH ELEC. INSTAL.
01.00921.00	935-053-00	1	FARO	BEACON
01.00923.00	935-053-00	2	LAMPARA	BULB
01.00927.01	935-053-00	6	TRAMO I/E	LENGTH ELEC. INSTAL.
01.00928.00	935-045-00	4	PORTAFUSIBLES	FUSE BOX
01.01030.00	935-028-00	5	COJINETE NYLON	NYLON BEARING
01.01032.00	935-028-00	4	SOP. EJE	AXLE SUPPORT
01.01302.00	935-012-02	15	TUERCA DIN934*	NUT DIN934*
	097-002-00	21	TUERCA DIN934*	NUT DIN934*
01.01303.00	935-014-00	26	TUERCA DIN934*	NUT DIN934*
01.01304.00	935-022-00	18	TUERCA DIN934*	NUT DIN934*
01.01305.00	935-014-00	44	TUERCA DIN431*	NUT DIN431*
01.01312.00	935-014-00	11	TUERCA DIN935*	CASTELL. NUT DIN935*
01.01314.00	935-016-00	12	TUERCA DIN935*	CASTELL. NUT DIN935*
01.01319.00	935-014-00	4	TUERCA DIN935*	CASTELL. NUT DIN935*
01.01354.00	935-054-00	9	PLACA AD. INDI.	PLATE AD. INDI
01.01355.03	935-054-00	4	PLACA AD. INDI.	PLATE AD. INDI
01.01355.07	935-054-00	5	PLACA AD. INDI.	PLATE AD. INDI
01.01360.00	935-044-00	9	CONECTOR	PLUG
01.01453.00	935-040-00	80	TUBO R1T1/2'	HOSE R1T1/2'
01.01590.00	935-004-00	1	TUBO ADMISION	ADMISSION TUBE
01.01925.00	935-005-00	8	CIERRE	LATCH
01.03000.00	935-012-02	1	DIFERENCIAL	DIFFERENTIAL
01.03010.02	935-012-02	5	CAJA DIFERENCIAL	DIFFERENTIAL HOUSING
01.03841.00	935-010-00	4	TAPA REGISTRO	COVER HANDHOLE
01.03902.00	935-012-02	8	ARANDELA REG.	WASHER ADJUST.
01.03903.00	935-012-02	8	ARANDELA REG.	WASHER ADJUST.
01.03912.00	935-011-00	8	ARANDELA REG.	WASHER ADJUST.
01.06171.00	935-017-00	10	CUERPO CIL.	CYLINDER BODY
01.06171.09	097-004-00	7		
01.06172.00	935-017-00	9	GUIA	GUIDE
	097-004-00	8	GUIA	GUIDE
01.06173.00	935-017-00	11	VASTAGO	SPINDLE
01.06173.01	097-004-00	10	VASTAGO	SPINDLE
01.06175.00	935-017-00	7	SOP. ANG.	BRACKET ANG.
01.06176.00	935-017-00	8	SOP. ANG.	BRACKET ANG.
01.08236.01	935-031-00	1	PROTECTOR COND.	DRIVER PROTECTOR
01.08237.20	935-031-00	3	BARRA.	ROD
01.08237.21	935-031-00	2	PROT. CONDUCTOR	DRIVER GUARD
01.08251.00	935-031-00	14	SOP. ANG.	BRACKET ANG.
01.08255.00	935-064-00	1	PROTECTOR COND.	DRIVER PROTECTOR
01.13570.00	935-054-00	21	PLACA	PLATE

Referencia *Reference*	Tabla *Board*	Fig. Nº *Fig. Nr*	Denominación *Denomination*	
01.30000.00	935-011-00	1	GRUPO CONICO	CONICAL GEAR SET
	935-012-02	7	GRUPO CONICO	CONICAL GEAR SET
01.61720.00	935-017-00	3	MATERIAL TUBO	TUBE MATERIAL
02.00013.01	935-011-00	12	ENGRANAJE.	GEAR
02.00145.00	935-040-00	45	TUBO R1T1/4'	HOSE R1T1/4'
	935-041-00	37	TUBO R1T1/4'	HOSE R1T1/4'
02.00183.00	935-014-00	47	BRIDA FORU	CLAMP U
02.00358.00	935-011-00	27	ENGRANAJE EST. z14	GEAR z14
02.00385.02	935-012-02	13	ENGRANAJE z11-11	GEAR z11-11
02.00400.01	935-014-00	1	TROMPETA	ASCLE HOUSING
02.00411.00	935-014-00	30	ENGRANAJE z48	GEAR z48
02.00414.99	935-014-00	37	PALIER	DRIVE SHAFT
02.00415.00	935-014-00	33	TUERCA DIN547*	NUT DIN547*
02.00417.00	935-014-00	38	TUERCA DIN547*	NUT DIN547*
02.00419.00	935-014-00	39	ANILLO DIN471*	SNAP RING DIN471*
02.00518.00	935-014-00	40	TAMBOR FRENO	BRAKE DRUM
02.00518.04	935-014-00	40	TAMBOR FRENO	BRAKE DRUMP
02.00519.01	935-014-00	36	CHAVETA DIN6888	FEATHER DIN6888 KEY
02.00580.00	935-026-00	6	RUEDA	WHEEL RIM
02.00590.00	935-026-00	7	CAMARA	TUBE
02.00600.04	935-016-00	2	PUENTE DIRECTRIZ	REAR AXLE
02.00757.00	935-029-00	20	TAPON.	CAP
02.00758.00	935-028-00	2	TAPON.	CAP
02.00773.01	935-054-00	8	PLACA AD. INDI.	PLATE AD. INDI
02.00774.00	935-054-00	22	PLACA AD. INDI.	PLATE AD. INDI
02.00775.01	935-054-00	31	PLACA AD. INDI.	PLATE AD. INDI
02.00777.00	935-054-00	23	PLACA AD. INDI.	PLATE AD. INDI
02.00778.00	935-054-00	24	PLACA AD. INDI.	PLATE AD. INDI
02.00779.01	935-054-00	25	PLACA AD. INDI.	PLATE AD. INDI
02.00780.02	935-028-00	8	TAPA.	COVER
02.00780.09	935-028-00	19	PERFIL GOMA	RUBBER PROFILE
02.00780.10	935-028-00	6	PERFIL GOMA	RUBBER PROFILE
02.00788.00	935-031-00	4	SOP. FIJACION	FIXING SUPPORT
02.00826.00	935-029-00	21	PERFIL GOMA	RUBBER PROFILE
02.00923.02	935-029-00	3	GUARDABARROS	MUDGUARD
02.00924.02	935-040-00	1	DEPOSITO	TANK
	935-041-00	1	DEPOSITO	TANK
	935-043-00	2	DEPOSITO	TANK
02.00925.01	935-005-00	11	DEPOSITO	TANK
02.00926.00	935-028-00	10A	TAPA	COVER
02.00926.01	935-028-00	10	TAPA	COVER
02.01125.00	935-001-00	11	PROT. MOTOR	ENGINE GUARD
02.01223.00	935-051-00	10	PEDAL ACEL.	ACCEL. PEDAL
02.01432.00	935-040-00	4	TAPA REGISTRO	COVER HANDHOLE
	935-041-00	4	TAPA REGISTRO	COVER HANDHOLE
02.01432.01	935-043-00	6	TAPA REGISTRO	COVER HANDHOLE
02.01926.01	935-044-00	15	SOP. BATERIA	BATTERY SUPPORT
	935-047-00	26	SOP. BATERIA	BATTERY SUPPORT
	935-049-00	18	SOP. BATERIA	BATTERY SUPPORT
	935-051-00	29	SOP. BATERIA	BATTERY SUPPORT
02.02926.01	935-044-00	24	SOP. PAS. FOR.	STRIGHT SUPPORT
	935-047-00	38	SOP. PAS. FOR.	STRIGHT SUPPORT
	935-051-00	27	SOP. PAS. FOR.	STRIGHT SUPPORT
02.08102.00	935-024-00	6	CABLE FRENO	BRAKE CABLE
02.09240.02	935-043-00	1		
02.09250.00	935-005-00	1		
02.10923.00	935-029-00	10	SUPLEMENTO	PANEL
02.11101.00	935-005-00	4	CIERRE	LATCH
02.11923.00	935-029-00	5	SUPLEMENTO	PANEL
02.20003.00	097-010-00	5	PLACA AD. INDI.	PLATE AD. INDI
02.20922.00	935-029-00	6	PROT. MOTOR	ENGINE GUARD
02.21922.01	935-029-00	7	PROT. MOTOR	ENGINE GUARD
02.30368.00	935-040-00	42	TUBO R1T3/8'	HOSE R1T3/8'
	935-041-00	33	TUBO R1T3/8'	HOSE R1T3/8'
02.30927.00	935-029-00	1	PROTECTOR	PROTECTOR
02.30927.01	935-029-00	1	PROTECTOR	PROTECTOR
02.32013.00	935-028-00	20	TAPON.	CAP
02.32016.00	935-029-00	11	TAPON.	CAP
02.32022.00	935-028-00	21	TAPON.	CAP
02.40323.01	935-013-00	2	PALANCA MANDO	CONTROL LEVER
02.41323.00	935-013-00	3	PALANCA MANDO	CONTROL LEVER
02.50551.00	935-024-00	15	MAT. CUA.	

Referencia *Reference*	Tabla *Board*	Fig. Nº *Fig. Nr*	Denominación *Denomination*	
08.00301.02	935-041-00	15		
08.60200.00	935-040-00	13		
08.00297.00	935-040-00	50	RACOR O/TB	NIPPLE O/TB
	935-041-00	42	RACOR O/TB	NIPPLE O/TB
08.00298.00	935-040-00	26	RACOR O/M	NIPPLE O/M
	935-041-00	26	RACOR O/M	NIPPLE O/M
08.00301.02	935-040-00	15	RACOR M/TB	NIPPLE M/TB
08.00313.00	935-040-00	11	RACOR M/M	NIPPLE M/M
08.00314.00	935-040-00	33	RACOR M/H	NIPPLE M/H
	935-041-00	62	RACOR M/H	NIPPLE M/H
08.00315.00	935-040-00	24	RACOR TOR. SIMPLE	NIPPLE SCREW SIM.
	935-041-00	24	RACOR TOR. SIMPLE	NIPPLE SCREW SIM.
08.00316.00	935-040-00	75	JUNTA MET. BUNA	GASKET MET. BUNA
	935-041-00	76	JUNTA MET. BUNA	GASKET MET. BUNA
	935-043-00	15	JUNTA MET. BUNA	GASKET MET. BUNA
08.00317.00	935-040-00	21	JUNTA MET. BUNA	GASKET MET. BUNA
	935-041-00	21	JUNTA MET. BUNA	GASKET MET. BUNA
08.00319.00	935-040-00	20	RACOR M/M	NIPPLE M/M
	935-041-00	20	RACOR M/M	NIPPLE M/M
08.00330.01	935-040-00	19	DISTRIBUIDOR 2E	CONTROL VALVE 2E
	935-042-00	1	DISTRIBUIDOR 2E	CONTROL VALVE 2E
08.00330.03	935-041-00	19	DISTRIBUIDOR 3E	CONTROL VALVE 3E
	935-042-00	1	DISTRIBUIDOR 3E	CONTROL VALVE 3E
08.00500.09	935-040-00	62	CILINDRO D/E	CYLINDER D/E
	935-041-00	54	CILINDRO D/E	CYLINDER D/E
08.00521.04	935-037-00	3	EMBOLO	PISTON
08.00525.01	935-037-00	6	VASTAGO	SPINDLE
08.00527.00	935-019-00	6	COJINETE CIL.	BEARING CYL.
	935-037-00	14	COJINETE CIL.	BEARING CYL.
08.00528.02	935-037-00	7	GUIA	GUIDE
08.00530.01	935-037-00	9	TUERCA DIN547*	NUT DIN547*
08.00701.06	935-028-00	1	PUPITRE	MAST
08.11180.02	935-051-00	46	SOP. ANG.	BRACKET ANG.
08.11180.03	935-051-00	45	SOP. ANG.	BRACKET ANG.
08.13090.00	935-040-00	53		
08.13090.00	935-041-00	45		
08.30321.00	935-013-00	9	PALANCA CONTACTO	GEAR LEVER
08.55022.00	935-041-00	8	FILTRO ACEITE	OIL FILTER
08.55072.00	935-040-00	8		
08.60080.00	935-040-00	12	RACOR FORT M/TL/M	THREE-WAY UNION M/TL/M
09.00118.00	935-007-00	10	TUBO ADMISION	ADMISSION TUBE
09.00119.01	935-002-00	15	TUBO SALIDA GASES	TUBE EXHAUST
09.00123.00	937-018-00	1		
09.00125.01	935-007-00	13	PLETINA	STRIP
09.00158.00	935-007-00	11	TUBO ADMISION	ADMISSION TUBE
09.00167.01	935-007-00	6	TIRANTE	TIE ROD
09.00171.00	935-007-00	24	DEPOSITO	TANK
09.00172.00	935-007-00	23	TAPON.	CAP
09.00215.01	935-020-00	2	VASTAGO	SPINDLE
09.00230.00	935-004-00	16	TUBO ADMISION	ADMISSION TUBE
09.00245.00	935-007-00	29	TAPON.	CAP
09.00328.00	935-047-00	23	SOP. PAS. REC.	STRIP SUPPORT
09.00328.00	935-051-00	16	SOP. PAS. REC.	STRIP SUPPORT
09.00330.00	935-040-00	81		
	935-042-00	1		
09.00426.00	935-014-00	3	TAMBOR SEPARADOR	SEPARATOR CASING
09.00500.07	935-037-00	1	CILINDRO D/E	CYLINDER D/E
	935-040-00	69	CILINDRO D/E	CYLINDER D/E
	935-041-00	70	CILINDRO D/E	CYLINDER D/E
09.00501DE00	935-026-00	5		
09.00520.02	935-037-00	12		
09.00608.01	935-025-00	1		
09.00630.61	935-043-00	4	FILTRO ACEITE	OIL FILTER
09.00631.00	935-040-00	54	VARILLA NIVEL	ROD OIL LEVEL
	935-041-00	46	VARILLA NIVEL	ROD OIL LEVEL
	935-043-00	11	VARILLA NIVEL	ROD OIL LEVEL
09.00692.00	935-040-00	41	RACOR.	NIPPLE
	935-041-00	32	RACOR.	NIPPLE
09.00705.43	935-019-00	7	BASTIDOR	FRAME
	097-012-00	1	BASTIDOR	FRAME
09.00720.01	935-007-00	20	PLETINA	STRIP
09.00750.00	935-028-00	16	TOPE.	BUTT

Referencia *Reference*	Tabla *Board*	Fig. Nº *Fig. Nr*	Denominación *Denomination*	
	935-031-00	5	TOPE.	BUTT
09.00769.00	935-054-00	14	PLACA AD. INDI.	PLATE AD. INDI
09.00773.01	935-022-00	15	TUBO BUNDY3	TUBE BUNDY3
09.00774.01	935-022-00	9	TUBO BUNDY3	TUBE BUNDY3
09.00922.01	935-050-00	2	CAJA.	BOX.
09.00922.03	935-045-00	14	CAJA.	BOX.
09.00922.05	935-048-00	1	CAJA.	BOX.
	935-052-00	2	CAJA.	BOX.
09.00923.03	935-045-00	3	TAPA SOP.	FLANGE
09.00923.04	935-048-00	2	TAPA.	COVER
09.00925.01	935-052-00	5		
09.00940.00	935-050-00	16	TAPA.	COVER
09.01200.00	935-004-00	3	FILTRO AIRE	AIR FILTER
09.01201.00	935-004-00	4	ABRAZADERA.	CLAMP
09.01203.00	935-040-00	82	VALVULA	VALVE
	935-041-00	81	VALVULA	VALVE
09.01203.01	935-040-00	60	VALVULA	VALVE
	935-041-00	52	VALVULA	VALVE
09.01204.00	935-004-00	8	ELEMENTO FILTRANT	FILTER ELEMENT
09.01223.00	935-049-00	3		
09.01242.01	935-050-00	17		
09.01243.01	935-052-00	20		
09.01451.00	935-042-00	2	PALANCA MANDO	CONTROL LEVER
09.01501.01	935-049-00	7	TRAMO I/E	LENGTH ELEC. INSTAL.
09.01510.01	935-020-00	6		
09.01827.00	937-030-00	5	SOP. PLACA	SUPPORT PLATE
09.01828.00	937-030-00	6	SOP. PLACA	SUPPORT PLATE
09.01829.00	937-030-00	4	FALDON	GUARD
09.01830.00	937-030-00	2	SOP. ANG.	BRACKET ANG.
09.01831.00	937-030-00	3	FALDON	GUARD
09.01832.00	937-030-00	1	SOP. ANG.	BRACKET ANG.
09.02110.00	935-002-00	1	MOTOR DIESEL	ENGINE DIESEL
09.02120.00	935-002-00	1		
09.02121.00	935-002-00	3	FILTRO ACEITE	OIL FILTER
09.02122.00	935-002-00	2	FILTR. COMBUSTIBLE	FILTER FUEL
09.02123.00	935-002-00	5	ALTERNADOR	GENERATOR
	935-049-00	5	ALTERNADOR	GENERATOR
	935-051-00	40	ALTERNADOR	GENERATOR
09.02124.00	935-002-00	6	MOTOR ARRANQUE	STARTER
	935-049-00	4	MOTOR ARRANQUE	STARTER
	935-051-00	41	MOTOR ARRANQUE	STARTER
09.02125.00	935-002-00	4	SENSOR	SENSOR
	935-002-00	7	SENSOR	SENSOR
09.02126.00	935-049-00	23	SENSOR	SENSOR
	935-051-00	35	SENSOR	SENSOR
09.02127.00	935-049-00	22	SENSOR	SENSOR
	935-051-00	36	SENSOR	SENSOR
09.02128.00	935-049-00	24	ELECTROIMAN	STOP ELECTROMAGN.
	935-051-00	38	ELECTROIMAN	STOP ELECTROMAGN.
09.02129.00	935-049-00	25	BUJIA	SPARK PLUG
	935-051-00	37	BUJIA	SPARK PLUG
09.02131.00	935-002-00	21		
09.02217.00	935-006-00	13	SOP. MOTOR	ENGINE SUPPORT
09.02808.00	935-002-00	14	GRUESO REG. REC.	REGUL SPACER
09.02821.00	935-007-00	1	EMBUDO	LEVER DESCOMPRESS.
09.02822.00	935-007-00	1		
09.03016.00	097-008-00	17	RESORTE TORS.	SPRING TORSION
09.03023.00	097-008-00	6		
09.03045.00	097-009-00	1	TAPA.	COVER
09.03055.00	097-008-00	2	VARILLA FORL6	ROD L6
09.03065.00	097-008-00	10	BIELA	CON ROD
09.03080.00	097-009-00	6	SOP. EJE	AXLE SUPPORT
09.03081.00	097-008-00	11	EJE CAS/CIL	SHAFT 'CAS/CIL'
	097-009-00	16	EJE CAS/CIL	SHAFT 'CAS/CIL'
09.03094.00	097-006-00	19	EJE CPA/CPA	AXLE 'CPA/CPA'
	097-008-00	15	EJE CPA/CPA	AXLE 'CPA/CPA'
09.03104.00	097-009-00	12	TAPA.	COVER
09.03130.00	097-009-00	5	EJE CIL/ROS	AXLE 'CIL/ROS'
09.03135.00	097-009-00	3	EJE CIL/CIL	SHAFT 'CIL/CIL'
09.03140.00	097-008-00	16	EJE CIL/CIL	SHAFT 'CIL/CIL'
09.03150.00	097-009-00	17	PALANCA ACC.	ACC.LEVER
09.03159.00	097-010-00	1	PEDAL FIJ.	HOOPER PEDAL

Referencia *Reference*	Tabla *Board*	Fig. Nº *Fig. Nr*	Denominación *Denomination*	
09.03179.00	097-006-00	14	EJE CIL/CPA	AXLE 'CIL/CPA'
09.03350.00	097-008-00	23		
09.03351.00	097-008-00	25	CASQUILLO.	BUSH
09.03360.00	097-008-00	24	EJE CIL/CIL	SHAFT 'CIL/CIL'
09.03485.00	097-006-00	17	EJE CAS/CAS	SHAFT 'CAS/CAS'
	097-008-00	19	EJE CAS/CAS	SHAFT 'CAS/CAS'
09.06130.00	935-025-00	3		
	935-041-00	35		
09.06150.00	937-018-00	14	VARILLA.	ROD
09.09240.01	935-050-00	4	TABLIER	DASH, PANEL
09.09250.01	935-052-00	4	TABLIER	DASH, PANEL
09.09900.00	935-054-00	7	PLACA AD. INDI.	PLATE AD. INDI
09.09902.00	935-054-00	1	PLACA AD. INDI.	PLATE AD. INDI
09.10155.00	935-054-00	19	PLACA AD. INDI.	PLATE AD. INDI
09.10501IZ00	935-026-00	5		
09.10680.00	935-025-00	2	COLUMNA DIREC.	STEERING COLUMM
09.10750.00	935-026-00	8		
09.11009.00	935-031-00	18	ESPEJO RETROVISOR	DRIVING MIRROR
	935-057-00	1	ESPEJO RETROVISOR	DRIVING MIRROR
09.11010.00	935-057-00	3		
09.11011.00	935-057-00	4		
09.11012.00	935-057-00	5		
09.11013.00	935-031-00	19	ESPEJO RETROVISOR	DRIVING MIRROR
	935-057-00	2	ESPEJO RETROVISOR	DRIVING MIRROR
09.11829.01	937-030-00	8	FALDON	GUARD
09.11831.01	937-030-00	7	FALDON	GUARD
09.12101.01	935-020-00	1	CILINDRO D/E	CYLINDER D/E
09.12101.01	935-040-00	27	CILINDRO D/E	CYLINDER D/E
09.12101.01	935-041-00	27	CILINDRO D/E	CYLINDER D/E
09.12106.00	935-019-00	2	PASADOR DIN94	SPLIT PIN DIN94
09.12107.00	935-019-00	3	EJE CIL/CIL	SHAFT 'CIL/CIL'
09.12125.00	935-019-00	5	COJINETE CIL.	BEARING CYL.
09.12501.00	937-020-00	1	BRAZO PALA	SHOVEL ARM
09.13010.00	935-002-00	8	BOMBA HIDR.	HYDR. PUMP
	935-041-00	10	BOMBA HIDR.	HYDR. PUMP
09.13014.00	935-040-00	39	VALVULA	VALVE
	935-041-00	30	VALVULA	VALVE
09.13180.01	935-040-00	40	TUBO GOMA B/P	HOSE RUBBER B/P
	935-041-00	31	TUBO GOMA B/P	HOSE RUBBER B/P
09.13360.00	935-040-00	78	TUBO R1T3/8'	HOSE R1T3/8'
	935-041-00	79	TUBO R1T3/8'	HOSE R1T3/8'
09.14012.00	097-009-00	15	INTERRUPTOR	SWITCH
09.14105.00	097-010-00	6	LUZ TESTIGO	WARNING LIGHT
09.14140.00	097-009-00	20	TRAMO I/E	LENGTH ELEC. INSTAL.
	097-010-00	9	TRAMO I/E	LENGTH ELEC. INSTAL.
09.15050.00	097-010-00	4	INDICADOR	INDICATOR
09.15146.00	935-054-00	32	PLACA AD. INDI.	PLATE AD. INDI
09.20001.00	935-054-00	6	INDICADOR	INDICATOR
09.50020.01	935-045-00	11	TABLIER	DASH, PANEL
09.50022.00	935-048-00	8		
09.50026.00	935-048-00	5	CAJA INTERMITENCIA	PULSE GENERATOR
09.55025.00	935-036-00	1	TAMBOR AMASADO	MIXER DRUM
09.55032.01	935-034-00	1		
	935-039-00	4		
09.55050.00	935-039-00	1	PROT. TRANS.	GUARD TRANS.
09.55090.00	935-034-00	3		
09.55123.00	937-020-00	2		
09.55127.00	937-020-00	3		
09.55131.00	935-035-00	3		
09.55132.00	935-035-00	6		
09.55133.00	935-035-00	2		
09.55134.00	935-035-00	1		
09.55189.00	935-038-00	4		
09.55192.00	935-034-00	14		
09.60080.00	935-041-00	12	RACOR FORT M/TL/M	THREE-WAY UNION M/TL/M
09.60410.01	935-007-00	8	RADIADOR	RADIATOR
09.70034.00	935-048-00	15	INTERRUPTOR	SWITCH
	935-052-00	6	INTERRUPTOR	SWITCH
09.87228.00	935-037-00	5		
09.92400.01	935-049-00	1		
	935-050-00	1		
09.92500.01	935-051-00	1		

Referencia *Reference*	Tabla *Board*	Fig. Nº *Fig. Nr*	Denominación *Denomination*	
	935-052-00	1		
09.99007.00	935-010-00	17		
	935-011-00	19		
	935-011-00	24		
	935-011-00	26		
	935-011-00	34		
	935-011-00	37		
	935-012-02	12		
10.00020.01	935-009-00	25	PALANCA ACC.	ACC.LEVER
10.00131.00	935-008-00	13	ARANDELA DIN1440*	WASHER DIN1440*
10.00157.00	935-008-00	14	MANIVELA ARRANQ.	STARTING HANDLE
10.00201.00	935-003-00	6	CONJ. PRESION	PRESSURE PLATE
10.00214.01	935-021-00	9	EJE CIL/CPA	AXLE 'CIL/CPA'
10.00215.01	935-021-00	2	PEDAL EMBR.	CLUTCH PEDAL
10.00502DE03	935-027-00	1		
10.00502IZ03	935-027-00	1		
10.00519.04	935-021-00	3	PEDAL FRENO	BRAKE PEDAL
	935-022-00	4	PEDAL FRENO	BRAKE PEDAL
	935-024-00	1	PEDAL FRENO	BRAKE PEDAL
10.00555.00	935-027-00	3	CAMARA	TUBE
	935-027-00	3	CAMARA	TUBE
10.00561.00	935-027-00	2	RUEDA	WHEEL RIM
10.00585.01	935-027-00	4	CUBIERTA	PNEUMATIC
10.00685.01	935-040-00	43	DIRECCION HIDR.	HYDROSTATIC STEERING
	935-041-00	34		
10.00692.00	935-040-00	17		
	935-041-00	17		
10.00776.00	935-006-00	8	SOP. PAS. FOR.	STRIGHT SUPPORT
10.00776.01	935-006-00	12	SOP. MOTOR	ENGINE SUPPORT
10.00921.00	935-010-00	14	TAPON.	CAP
	097-001-00	20	TAPON.	CAP
	097-006-00	10	TAPON.	CAP
10.01352.00	935-040-00	28	RACOR M/H	NIPPLE M/H
	935-041-00	28	RACOR M/H	NIPPLE M/H
10.01353.00	935-040-00	29	RACOR M/H	NIPPLE M/H
10.01356.00	935-040-00	66	TUBO R1T3/8'	HOSE R1T3/8'
10.01382.00	935-040-00	83	RACOR TOR. SIMPLE	NIPPLE SCREW SIM.
10.02144.00	935-004-00	15	RACOR C90M/H	ELBOW C90M/H NIPPLE
10.03101.03	097-006-00	20		
10.03101.03	097-007-00	1	SOP. ENGRANAJE	GEAR SUPPORT
	097-008-00	1	SOP. ENGRANAJE	GEAR SUPPORT
	097-009-00	13	SOP. ENGRANAJE	GEAR SUPPORT
10.03102.00	097-006-00	2	TAPA.	COVER
10.03103.00	097-007-00	9	ENGRANAJE.	GEAR
10.03104.01	097-007-00	4	EJE CIL/CIL	SHAFT 'CIL/CIL'
10.03106.00	097-006-00	13	HORQUILLA ACC.	ACC. FORK
10.03107.00	097-006-00	6	EJE CAS/CIL	SHAFT 'CAS/CIL'
10.03109.00	097-006-00	11	EJE CIL/COA	SHAFT 'CIL/COA'
10.03113.00	097-011-00	1	JUNTA CARDAN	PROPELLER SHAFT
10.03114.00	097-011-00	2		
10.03115.00	097-011-00	3		
10.09101.01	935-017-00	2	ROTULA DIREC.	L BALL
10.09101.01	097-004-00	3	ROTULA DIREC.	L BALL
	935-027-00	4	CUBIERTA TT	TYRE 'TT'
11.99130.01	935-017-00	17		
	097-004-00	16		
14.00775.00	935-054-00	12	PLACA AD. INDI.	PLATE AD. INDI
14.00775.01	935-054-00	12	PLACA AD. INDI.	PLATE AD. INDI
14.00775.02	935-054-00	12	PLACA AD. INDI.	PLATE AD. INDI
14.00775.03	935-054-00	12	PLACA AD. INDI.	PLATE AD. INDI
14.00788.02	935-033-00	6	CONTRAPESO	BALLAST WEIGHT
14.01315.00	935-040-00	85	CASQUILLO.	BUSH
14.01322.00	935-040-00	30	TUBO R1T3/8'	HOSE R1T3/8'
	935-040-00	31	TUBO R1T3/8'	HOSE R1T3/8'
	935-041-00	59	TUBO R1T3/8'	HOSE R1T3/8'
	935-041-00	60	TUBO R1T3/8'	HOSE R1T3/8'
14.01324.00	935-041-00	67	TUBO R1T3/8'	HOSE R1T3/8'
14.01326.00	935-040-00	77	TUBO R1T3/8'	HOSE R1T3/8'
	935-041-00	78	TUBO R1T3/8'	HOSE R1T3/8'
14.11430.00	935-051-00	21	SOP. PAS. REC.	STRIP SUPPORT
14.11430.10	935-047-00	32	SOP. PAS. REC.	STRIP SUPPORT
14.40901.00	935-029-00	8	CATADIOPTRICO	RED REFLECTOR

Referencia *Reference*	Tabla *Board*	Fig. Nº *Fig. Nr*	Denominación *Denomination*	
15.00107.01	935-009-00	12	SOP. MOTOR	ENGINE SUPPORT
15.00109.00	935-009-00	11	SUPLEMENTO	PANEL
15.00113.00	935-006-00	3		
	935-009-00	8	AMORTIGUADOR.	SHOCK ABSORVER
15.00114.00	935-009-00	7	CASQUILLO.	BUSH
15.00114.01	935-006-00	2	CASQUILLO.	BUSH
15.00124.01	937-018-00	3	SOP. EJE	AXLE SUPPORT
15.00315.00	935-011-00	32	RESORTE COMP.	SPRING COMPRESSION
15.00357.00	097-001-00	23	ESPARRAGO DIN939*	STUD DIN939*
15.00727.00	937-018-00	9	VARILLA FORL6	ROD L6
15.00750.00	097-012-00	3	ARANDELA DIN6916*	WASHER DIN6916*
15.00832.00	935-020-00	16	SUPLEMENTO	PANEL
	935-037-00	17	SUPLEMENTO	PANEL
15.00834.00	935-033-00	5	CADENA	CHAIN
15.00835.00	935-033-00	4	EJE CPA/GRA	AXLE 'CPA/GRA'
15.00836.00	935-033-00	3	PASADOR DIN11024	GRIP CLIP DIN11024
15.01016.01	935-025-00	8	VOLANTE DIREC.	WHEEL STEERING
15.01203.020	935-040-00	10		
15.01216.00	935-020-00	15	EJE CIL/COA	SHAFT 'CIL/COA'
	935-037-00	15	EJE CIL/COA	SHAFT 'CIL/COA'
15.01223.00	935-040-00	23	RACOR O/M/M	NIPPLE O/M/M
	935-040-00	63	RACOR O/M/M	NIPPLE O/M/M
	935-041-00	23	RACOR O/M/M	NIPPLE O/M/M
	935-041-00	55	RACOR O/M/M	NIPPLE O/M/M
15.01234.00	935-040-00	67	TUBO R1T3/8'	HOSE R1T3/8'
	935-041-00	68	TUBO R1T3/8'	HOSE R1T3/8'
15.01235.00	935-040-00	68	TUBO R1T3/8'	HOSE R1T3/8'
	935-041-00	69	TUBO R1T3/8'	HOSE R1T3/8'
15.01443.00	935-044-00	17	CABLE ELEC.	ELECTRICAL CABLE
	935-047-00	14	CABLE ELEC.	ELECTRICAL CABLE
15.01444.00	935-049-00	17	CABLE ELEC.	ELECTRICAL CABLE
	935-051-00	18	CABLE ELEC.	ELECTRICAL CABLE
15.01453.00	935-040-00	84	RACOR C90M/M	ELBOW C90M/M NIPPLE
15.01524.00	935-005-00	2	TAPON.	CAP
	935-005-00	6	TAPON.	CAP
15.01525.00	935-054-00	29	PLACA AD. INDI.	PLATE AD. INDI
15.01616.00	935-040-00	51		
15.01616.00	935-041-00	43		
15.01993.00	935-002-00	27	SOP. ANG.	BRACKET ANG.
15.02011.01	935-003-00	5	DISCO EMBR.	DISK CLUTCH
15.07780.00	935-023-00	4	TORNILLO DIN910*	SCREW DIN910*
15.08350.00	935-033-00	1		
15.10161.01	935-025-00	9		
15.20010.00	935-054-00	20	PLACA AD. INDI.	PLATE AD. INDI
16.00760.00	935-007-00	14	CASQUILLO.	BUSH
	935-053-00	8	CASQUILLO.	BUSH
16.01354.00	935-004-00	13	ARANDELA DIN9021*	CIR-CLIP INT. DIN9021*
16.01396.01	935-040-00	55	VALVULA	VALVE
	935-040-00	65	VALVULA	VALVE
	935-041-00	47	VALVULA	VALVE
	935-041-00	57	VALVULA	VALVE
16.01415.00	935-044-00	7	MOTOR ARRANQUE	STARTER
16.01449.12	935-047-00	6	SOP. PILOTO	LIGHT SUPPORT
	935-051-00	2	SOP. PILOTO	LIGHT SUPPORT
16.01449.13	935-047-00	7	SOP. PILOTO	LIGHT SUPPORT
	935-051-00	4	SOP. PILOTO	LIGHT SUPPORT
16.01470.00	937-018-00	8		
19.00220.03	935-020-00	3	GUIA	GUIDE
19.00221.01	935-020-00	4		
21.00161.00	935-053-00	7	PASACABLES	GROMMET
28.00337.00	935-040-00	36	RACOR M/M	NIPPLE M/M
	935-041-00	65	RACOR M/M	NIPPLE M/M
28.00339.00	935-040-00	48	RACOR O/M	NIPPLE O/M
	935-041-00	40	RACOR O/M	NIPPLE O/M
28.00340.00	935-040-00	46	RACOR TOR. SIMPLE	NIPPLE SCREW SIM.
	935-041-00	38	RACOR TOR. SIMPLE	NIPPLE SCREW SIM.
28.00341.00	935-040-00	35	JUNTA MET. BUNA	GASKET MET. BUNA
	935-041-00	39	JUNTA MET. BUNA	GASKET MET. BUNA
	935-041-00	64	JUNTA MET. BUNA	GASKET MET. BUNA
	935-040-00	47		
31.01064.00	935-022-00	14	RACOR O/H/H	NIPPLE O/H/H
31.01065.00	935-022-00	11	RACOR TOR. SIMPLE	NIPPLE SCREW SIM.

Referencia *Reference*	Tabla *Board*	Fig. Nº *Fig. Nr*	Denominación *Denomination*	
31.01329.00	935-047-00	43	LAMPARA	BULB
	935-051-00	22	LAMPARA	BULB
31.01331.00	935-047-00	42	LAMPARA	BULB
	935-051-00	23	LAMPARA	BULB
37.00007.00	935-010-00	1		
37.00157.03	935-024-00	16	SOP. PAS. REC.	STRIP SUPPORT
37.00157.12	935-024-00	17	SOP. BOMBA PIE	BRAKE PUMP SUPPORT
37.00374.00	935-006-00	5	ARANDELA DIN9021*	CIR-CLIP INT. DIN9021*
	935-009-00	6	ARANDELA DIN9021*	CIR-CLIP INT. DIN9021*
37.00726.22	935-029-00	13	PLANCHA	PLATE
37.01123.02	937-018-00	1	PEDAL ACEL.	ACCEL. PEDAL
37.01242.12	935-047-00	15	TRAMO I/E	LENGTH ELEC. INSTAL.
	935-051-00	8	TRAMO I/E	LENGTH ELEC. INSTAL.
37.01501.02	935-051-00	14	TRAMO I/E	LENGTH ELEC. INSTAL.
39.00379.00	097-002-00	1		
39.00500.10	097-001-00	25		
39.00617.12	097-004-00	1		
39.00923.02	935-029-00	3	GUARDABARROS	MUDGUARD
39.02041.00	937-018-00	27	SOP. ANG.	BRACKET ANG.
39.02514.00	937-018-00	26	EJE CAS/CPA	AXLE 'CAS/CPA'
39.05020.00	935-002-00	11	RETEN DIN3760	SEAL DIN3760
39.08242.00	935-054-00	30	PLACA AD. INDI.	PLATE AD. INDI
39.08252.00	935-031-00	10	CRISTAL	GLASS
39.09901.00	935-054-00	3	PLACA AD. INDI.	PLATE AD. INDI
39.10601.00	097-001-00	13	TAPA SOP.	FLANGE
39.10602.00	097-001-00	11	TAPA SOP.	FLANGE
39.10605.00	097-001-00	4	TROMPETA	ASCLE HOUSING
39.10606.01	097-001-00	1	TROMPETA	ASCLE HOUSING
39.10611.01	097-002-00	17	ENGRANAJE.	GEAR
39.10612.01	097-003-00	5	ENGRANAJE.	GEAR
39.10613.01	097-003-00	2	EJE CIL/CIL	SHAFT 'CIL/CIL'
39.10614.00	097-001-00	6	EJE CIL/CIL	SHAFT 'CIL/CIL'
39.10615.00	097-002-00	12	SUPLEMENTO	PANEL
39.10616.00	097-001-00	2	CASQUILLO.	BUSH
39.10618.00	097-005-00	8		
39.10619.00	097-005-00	1	ACOP. CIL/CIL	COUPLING CYL/CYL
39.10620.00	097-005-00	2	TAPA.	COVER
39.10621.00	097-002-00	3	ENGRANAJE.	GEAR
39.10622.00	097-002-00	4	ENGRANAJE.	GEAR
39.10623 .01	097-004-00	11	SOP. PLAN. CIL.	SUPPORT SHEET
39.10624.01	097-004-00	9	SOP. PLAN. CIL.	SUPPORT SHEET
39.10625.00	097-001-00	18	SOP. DIRECCION	STEERING SUPPORT
39.10626.00	097-001-00	22	SOP. DIRECCION	STEERING SUPPORT
39.10628.00	935-027-00	2	RUEDA	WHEEL RIM
	097-003-00	1	RUEDA	WHEEL RIM
39.10630.00	097-002-00	15	ROTULA.	BUSHING
39.10631.00	097-002-00	19	GUARDAPOLVO	DUST EXCLUDER
39.10632.00	097-002-00	14	TUERCA DIN982	NUT DIN982
39.10640.00	097-005-00	9	GRUESO REG. DISCO	REGUL SKIM
39.10641.00	097-001-00	9	GRUESO REG. REC.	REGUL SPACER
39.10641.01	097-001-00	9	GRUESO REG. REC.	REGUL SPACER
39.10642.00	097-007-00	6	GRUESO REG. REC.	REGUL SPACER
39.10643.00	097-003-00	8	ARANDELA.	WASHER
39.13172.00	935-002-00	9	ACOP. CIL/CIL	COUPLING CYL/CYL
39.15502DE00	935-027-00	1	RUEDA	WHEEL RIM
39.15502IZ00	935-027-00	1	RUEDA	WHEEL RIM
39.34046.00	935-002-00	12	ENGRANAJE.	GEAR
39.40010.00	935-002-00	10		
40.00005.00	935-013-00	22		
40.00005.10	935-013-00	22		
40.00007.00	935-010-00	1		
40.00100.20	935-001-00	1	MOTOR DIESEL	ENGINE DIESEL
40.00100.21	935-001-00	1	MOTOR DIESEL	ENGINE DIESEL
40.00148.00	937-018-00	17	CABLE MANDO	CABLE CHOKE
40.00930.00	935-029-00	2	SOP. PLACA	SUPPORT PLATE
40.02001.00	935-001-00	7	SILENCIADOR	MUFFLER
40.08440.10	935-044-00	3	TRAMO I/E	LENGTH ELEC. INSTAL.
40.09220.00	935-045-00	2	TABLIER	DASH, PANEL
40.10120.00	935-006-00	10	SOP. MOTOR	ENGINE SUPPORT
40.10178.01	935-008-00	1	SOP. ANG.	BRACKET ANG.
40.10179.01	935-008-00	9	EJE CPA/CPA	AXLE 'CPA/CPA'
40.10180.00	935-009-00	5		

Referencia *Reference*	Tabla *Board*	Fig. Nº *Fig. Nr*	Denominación *Denomination*	
40.10213.00	935-003-00	1	VOLANTE MOTOR	FLY WHEEL ENGINE
40.20150.00	935-001-00	5	TUBO SALIDA GASES	TUBE EXHAUST
40.30310.00	935-013-00	15	TAPA.	COVER
40.30310.01	935-013-00	15A	TAPA.	COVER
40.92200.00	935-044-00	2		
	935-045-00	1		
	935-048-00	1A		
40.92310.01	935-047-00	1		
42.00504.01	935-040-00	37	TUBO R1T1/4'	HOSE R1T1/4'
	935-041-00	66	TUBO R1T1/4'	HOSE R1T1/4'
43.00706.01	935-024-00	21	CABLE FRENO	BRAKE CABLE
43.00708.00	935-024-00	25	TAPA SOP.	FLANGE
43.00747.20	935-022-00	12		
	935-023-00	1		
43.00747.25	935-023-00	2	GUARDAPOLVO	DUST EXCLUDER
43.00747.34	935-023-00	3	VALVULA	VALVE
43.00747.90	935-023-00	5	JUEGO JUNTAS	GASKET SET
43.00750.06	935-022-00	16		
43.00750.07	935-005-00	9	TUBO PLAS. TRANS.	HOSE TRANS. PLAS
43.00750.08	935-043-00	17		
43.00751.00	935-022-00	1		
43.00755.01	935-024-00	11	PALANCA MANDO	CONTROL LEVER
43.00755.11	935-024-00	7	SOP. PAS. REC.	STRIP SUPPORT
43.00766.00	935-024-00	19	SOP. PAS. REC.	STRIP SUPPORT
43.01170.00	935-054-00	10	PLACA AD. INDI.	PLATE AD. INDI
43.01351.00	935-040-00	70	VALVULA	VALVE
	935-041-00	71	VALVULA	VALVE
43.01352.10	935-054-00	11	PLACA AD. INDI.	PLATE AD. INDI
43.01356.00	935-054-00	26	PLACA AD. INDI.	PLATE AD. INDI
43.01453.00	935-040-00	32	RACOR C90M/M	ELBOW C90M/M NIPP.
	935-041-00	11	RACOR C90M/M	ELBOW C90M/M NIPP.
	935-041-00	61	RACOR C90M/M	ELBOW C90M/M NIPP.
43.01521.00	935-022-00	13	INTERRUPTOR	SWITCH
43.01530.01	935-051-00	39	RELE	RELAY
43.01530.11	935-049-00	20		
43.03150.00	937-018-00	18		
43.07310.01	935-021-00	1	SUPLEMENTO	PANEL
43.07511.00	935-022-00	2		
43.07512.00	935-022-00	17		
43.07550.01	935-024-00	9		
43.08034.00	935-014-00	7	TORNILLO DIN912*	SCREW DIN912*
43.10621.00	935-049-00	2	CAJA.	BOX.
	935-051-00	9	CAJA.	BOX.
43.10623.00	935-047-00	18	CAJA INTERMITENCIA	PULSE GENERATOR
43.10827.01	935-044-00	20	SOP. FIJACION	FIXING SUPPORT
	935-047-00	28	SOP. FIJACION	FIXING SUPPORT
	935-049-00	11	SOP. FIJACION	FIXING SUPPORT
	935-051-00	32	SOP. FIJACION	FIXING SUPPORT
43.11192.00	935-004-00	14	RACOR M/H	NIPPLE M/H
43.14015.03	935-005-00	22		
43.14015.18	935-005-00	24		
43.14015.49	935-005-00	23		
43.14105.21	935-007-00	27		
43.50022.01	935-045-00	15	LLAVE CONTACTO	SWITCH KEY
	935-048-00	7	LLAVE CONTACTO	SWITCH KEY
	935-050-00	7	LLAVE CONTACTO	SWITCH KEY
	935-052-00	10	LLAVE CONTACTO	SWITCH KEY
43.50022.02	935-045-00	15	LLAVERO	
	935-048-00	20	LLAVERO	
43.50023.00	935-048-00	16	CONMUTADOR	CONMUTATOR
	935-052-00	17	CONMUTADOR	CONMUTATOR
43.50024.01	935-045-00	8	INTERRUPTOR	SWITCH
	935-048-00	11	INTERRUPTOR	SWITCH
	935-050-00	9	INTERRUPTOR	SWITCH
	935-053-00	9	INTERRUPTOR	SWITCH
43.50025.00	935-045-00	9	GUARDAPOLVO	DUST EXCLUDER
	935-048-00	14	GUARDAPOLVO	DUST EXCLUDER
	935-050-00	10	GUARDAPOLVO	DUST EXCLUDER
	935-052-00	14	GUARDAPOLVO	DUST EXCLUDER
43.50026.00	935-048-00	17	CONMUTADOR	CONMUTATOR
43.50027.00	097-010-00	8	LAMPARA	BULB
43.50028.00	097-010-00	7	CONECTOR	PLUG

Referencia *Reference*	Tabla *Board*	Fig. Nº *Fig. Nr*	Denominación *Denomination*	
43.50032.00	935-045-00	5	FUSIBLE	FUSE
	935-050-00	8	FUSIBLE	FUSE
	935-052-00	7	FUSIBLE	FUSE
43.50057.02	935-050-00	12	CAJA.	BOX.
	935-052-00	12	CAJA.	BOX.
43.50119.00	935-004-00	11	INDICADOR	INDICATOR
43.50124.00	935-040-00	56		
	935-041-00	48		
43.50125.00	935-040-00	57		
	935-041-00	49		
43.50127.00	935-040-00	58	TAPON.	CAP
	935-041-00	50	TAPON.	CAP
43.50128.00	935-040-00	59	TAPON.	CAP
	935-041-00	51	TAPON.	CAP
43.50129.00	935-034-00	8	TAPON.	CAP
43.50941.00	935-031-00	13	TORNILLO DIN923*	SCREW DIN923*
43.60233.01	935-040-00	71	RACOR M/H	NIPPLE M/H
	935-041-00	72	RACOR M/H	NIPPLE M/H
43.60255.00	935-040-00	72	RACOR C90M/M	ELBOW C90M/M NIPP.
	935-041-00	73	RACOR C90M/M	ELBOW C90M/M NIPP.
43.70581.01	097-006-00	16	RESORTE TORS.	SPRING TORSION
43.70940.00	935-043-00	13	RACOR M/M	NIPPLE M/M
44.00706.02	935-024-00	22	CABLE FRENO	BRAKE CABLE
45.00139.00	937-018-00	7	RESORTE TRAC.	SPRING TENSION
45.00139.01	937-018-00	7	RESORTE TRAC.	SPRING TENSION
	097-008-00	18	RESORTE TRAC.	SPRING TENSION
45.00369.00	097-006-00	5	ENGRANAJE z23	GEAR z23
45.00385.00	097-006-00	8	ACOP. CIL/CIL	COUPLING CYL/CYL
45.00407.21	935-015-00	3	PLATO FRENO	BRAKE PLATE
45.00407.26	935-015-00	5	MORDAZA FRENO	BRAKE SHOE
45.00408.21	935-015-00	3	PLATO FRENO	BRAKE PLATE
45.00408.26	935-015-00	5	MORDAZA FRENO	BRAKE SHOE
45.00408.29	935-015-00	6	MORDAZA FRENO	BRAKE SHOE
45.00408.44	935-015-00	7	RESORTE TRAC.	SPRING TENSION
45.00408.45	935-015-00	8	RESORTE TRAC.	SPRING TENSION
45.00408.46	935-015-00	4	TENSOR.	TENSIONER
45.00408.58	935-015-00	9	TORNILLO DIN912	SCREW DIN912
45.00408.59	935-015-00	10		
45.00408.60	935-015-00	11	TAPON.	CAP
45.00408.61	935-015-00	12		
45.01011.01	935-040-00	25	TUBO R1T3/8'	HOSE R1T3/8'
	935-041-00	25	TUBO R1T3/8'	HOSE R1T3/8'
45.01351.03	935-040-00	64	TUBO R1T3/8'	HOSE R1T3/8'
	935-041-00	56	TUBO R1T3/8'	HOSE R1T3/8'
45.01423.00	935-043-00	14	JUNTA MET. BUNA	GASKET MET. BUNA
45.01424.00	935-040-00	74	RACOR C90MO/M	ELBOW C90MO/M NIPP.
	935-041-00	75	RACOR C90MO/M	ELBOW C90MO/M NIPP.
45.01453.00	935-040-00	61	RACOR C90MO/M	ELBOW C90MO/M NIPP.
	935-041-00	53	RACOR C90MO/M	ELBOW C90MO/M NIPP.
45.01486.01	935-040-00	52		
	935-041-00	44		
45.01492.00	935-017-00	5	GUARDAPOLVO	DUST EXCLUDER
	097-004-00	6	GUARDAPOLVO	DUST EXCLUDER
45.01521.00	935-047-00	21		
45.04113.00	937-018-00	20	SOP. RESORTE	SPRING SUPPORT
45.04113.10	935-009-00	26	SOP. PAS. REC.	STRIP SUPPORT
45.04113.11	935-049-00	19	SOP. PAS. REC.	STRIP SUPPORT
	935-051-00	42	SOP. PAS. REC.	STRIP SUPPORT
45.04204.01	935-009-00	18		
45.04211.01	935-009-00	1	CAMPANA EMBR.	CLUTCH CASING
45.19101.00	935-054-00	13	PLACA AD. INDI.	PLATE AD. INDI
45.50032.00	935-048-00	12		
45.60002.01	935-032-00	6	CINTURON	BELT
46.00304.00	935-040-00	16		
	935-041-00	16		
46.00322.01	935-013-00	21	RESORTE TRAC.	SPRING TENSION
46.00403.00	935-015-00	1	FRENO	BRAKE
46.00404.00	935-015-00	1	FRENO	BRAKE
46.00407.34	935-015-00	2	BOMBIN	BRAKE CYLINDER
46.00627.00	937-018-00	9	VARILLA FORL6	ROD L6
46.00825.00	935-054-00	27	PLACA AD. INDI.	PLATE AD. INDI
46.00841.00	935-031-00	23	BRAZO LIMPIA	WINDSCR. WIPER ARM

Referencia *Reference*	Tabla *Board*	Fig. Nº *Fig. Nr*	Denominación *Denomination*	
	935-056-00	3	BRAZO LIMPIA	WINDSCR. WIPER ARM
46.00842.00	935-031-00	22		
	935-056-00	4		
46.00843.00	935-031-00	20	MOTOR LIMPIA	MOTOR WINDSCR. WIPER
	935-056-00	1	MOTOR LIMPIA	MOTOR WINDSCR. WIPER
46.01324.00	935-047-00	2	LAMPARA	BULB
	935-051-00	7	LAMPARA	BULB
46.01478.00	935-040-00	79		
	935-041-00	80		
46.10002.00	935-044-00	23	PROT. BORNE	TERMINAL PROTECTOR
	935-047-00	19	PROT. BORNE	TERMINAL PROTECTOR
	935-049-00	16	PROT. BORNE	TERMINAL PROTECTOR
46.10754.00	935-047-00	4	SOP. PAS. FOR.	STRIGHT SUPPORT
	935-051-00	5	SOP. PAS. FOR.	STRIGHT SUPPORT
46.10755.00	935-047-00	3	PILOTO	PILOT
	935-051-00	6	PILOTO	PILOT
46.50024.01	935-048-00	4	CAJA.	BOX.
	935-050-00	11	CAJA.	BOX.
	935-052-00	11	CAJA.	BOX.
	935-052-00	15	CAJA.	BOX.
46.50026.00	935-052-00	13	CAJA INTERMITENCIA	PULSE GENERATOR
	935-052-00	16	CAJA INTERMITENCIA	PULSE GENERATOR
46.50028.00	935-048-00	3		
	935-050-00	13		
	935-052-00	19		
46.50029.00	935-045-00	10	BRIDA.	CLAMP
	935-048-00	10	BRIDA.	CLAMP
	935-050-00	15	BRIDA.	CLAMP
	935-052-00	8	BRIDA.	CLAMP
46.50029.01	935-045-00	10	BRIDA.	CLAMP
47.00148.02	937-018-00	22	CABLE ACC.	ACCEL. CABLE
47.01469.00	935-040-00	14	VALVULA	VALVE
	935-041-00	14	VALVULA	VALVE
52.00108.00	935-040-00	44	RACOR M/M	NIPPLE M/M
	935-041-00	36	RACOR M/M	NIPPLE M/M
52.00110.02	935-005-00	19	RACOR M/M	NIPPLE M/M
52.00365.00	097-001-00	3	TAPON.	CAP
54.01327.00	935-047-00	5	PILOTO	PILOT
	935-051-00	3	PILOTO	PILOT
54.01819.01	935-040-00	18	TUBO R2T1/2'	HOSE R2T1/2'
54.01825.00	935-040-00	22	TUBO R1T3/8'	HOSE R1T3/8'
	935-041-00	18	TUBO R1T3/8'	HOSE R1T3/8'
	935-041-00	22	TUBO R1T3/8'	HOSE R1T3/8'
54.14400.00	935-005-00	14	TUBO PLAS. TRANS.	HOSE TRANS. PLAS
54.55001.01	935-038-00	1	MOTOR HIDR.	HYDRAULIC ENGINE
	935-040-00	34	MOTOR HIDR.	HYDRAULIC ENGINE
	935-041-00	63	MOTOR HIDR.	HYDRAULIC ENGINE
54.55002.00	935-038-00	2	CHAVETA DIN6888	FEATHER DIN6888 KEY
54.55003.00	935-038-00	3	ENGRANAJE.	GEAR
54.55005.00	935-038-00	5	ARANDELA DIN125*	WASHER DIN125*
54.55007.00	935-038-00	11	TORNILLO DIN933	SCREW DIN933
54.55008.00	935-038-00	12	CADENA	CHAIN
54.55009.00	935-038-00	13	ESLABON	LINK
54.55010.00	935-038-00	14	ESLABON	LINK
54.55026.00	935-036-00	2	CORONA	CROWN
54.55030.00	935-034-00	5	EJE CIL/CPA	AXLE 'CIL/CPA'
54.55031.00	935-034-00	6	RUEDA	WHEEL RIM
54.55033.00	935-039-00	3		
54.59180.00	937-018-00	19	TENSOR.	TENSIONER
55.00527.00	935-020-00	7	CASQUILLO.	BUSH
55.01448.00	935-041-00	7	RACOR M/M	NIPPLE M/M
55.01448.004	935-040-00	7		
55.55010.01	935-038-00	10	CLIP	CLIP
55.99200.01	935-020-00	8		
58.15340.00	935-045-00	16	AVISADOR ACUSTICO	HORN
	935-048-00	19	AVISADOR ACUSTICO	HORN
60.01007.00	935-042-00	3	EMPU\ADURA	KNOB
60.01371.00	935-040-00	9	TUBO R1T3/4'	HOSE R1T3/4'
	935-041-00	9	TUBO R1T3/4'	HOSE R1T3/4'
60.01372.00	935-040-00	6	TUBO MET.	TUBE MET.
	935-041-00	6	TUBO MET.	TUBE MET.
60.01453.00	935-056-00	7	EJE CIL/ROS	AXLE 'CIL/ROS'

Referencia *Reference*	Tabla *Board*	Fig. Nº *Fig. Nr*	Denominación *Denomination*	
	935-056-00	10	EJE CIL/ROS	AXLE 'CIL/ROS'
60.01454.00	935-056-00	5	PROT. LAMPARA	BULB GUARD
60.01454.01	935-056-00	8	PROT. LAMPARA	BULB GUARD
60.01924.01	935-028-00	7A	CIERRE	LATCH
60.01925.01	935-028-00	7	CIERRE	LATCH
60.13016.00	935-041-00	13	RACOR M/TL	NIPPLE M/TL
60.20102.00	935-040-00	73		
60.20102.00	935-041-00	74		
80.01035.01	935-010-00	12	TAPON.	CAP
	097-001-00	21	TAPON.	CAP
80.06041.00	935-005-00	15	RACOR TOR. SIMPLE	NIPPLE SCREW SIM.
85.11300.65	935-007-00	7	AMORTIGUADOR.	SHOCK ABSORVER
86.90000.01	935-001-00	2	FILTRO AIRE	AIR FILTER
	935-004-00	10	FILTRO AIRE	AIR FILTER
86.90000.02	935-001-00	4	FILTRO ACEITE	OIL FILTER
86.90000.03	935-001-00	3	FILTRO COMBUST.	FILTER FUEL
	935-005-00	21	FILTRO COMBUST.	FILTER FUEL
86.90000.04	935-047-00	10	MOTOR ARRANQUE	STARTER
86.90000.06	935-044-00	4	REGULAD. TENSION	VOLTAGR REGULATOR
	935-047-00	9	REGULAD.TENSION	VOLTAGR REGULATOR
86.90000.10	935-044-00	6A		
	935-047-00	12A		
86.90000.11	935-044-00	6	JUEGO JUNTAS	GASKET SET
	935-047-00	12	JUEGO JUNTAS	GASKET SET
86.90000.26	935-044-00	5	CORONA	CROWN
	935-047-00	13	CORONA	CROWN
101.05000.66	935-007-00	3	ARANDELA DIN125	WASHER DIN125
101.06000.66	935-031-00	16	ARANDELA DIN125	WASHER DIN125
	935-053-00	4	ARANDELA DIN125	WASHER DIN125
101.07000.86	935-021-00	15		
101.08000.66	935-001-00	10	ARANDELA DIN125	WASHER DIN125
	935-002-00	24	ARANDELA DIN125	WASHER DIN125
	935-005-00	16	ARANDELA DIN125	WASHER DIN125
	935-014-00	18	ARANDELA DIN125	WASHER DIN125
	937-018-00	16	ARANDELA DIN125	WASHER DIN125
	935-022-00	8	ARANDELA DIN125	WASHER DIN125
	935-024-00	3	ARANDELA DIN125	WASHER DIN125
	935-028-00	15	ARANDELA DIN125	WASHER DIN125
	935-029-00	25	ARANDELA DIN125	WASHER DIN125
101.10000.66	935-002-00	19	ARANDELA DIN125	WASHER DIN125
101.11000.66	935-031-00	12	ARANDELA DIN125	WASHER DIN125
101.12000.66	935-029-00	28	ARANDELA DIN125	WASHER DIN125
	097-008-00	14	ARANDELA DIN125	WASHER DIN125
101.14000.66	935-014-00	15	ARANDELA DIN125	WASHER DIN125
	097-006-00	15	ARANDELA DIN125	WASHER DIN125
101.16000.66	935-016-00	24	ARANDELA DIN125	WASHER DIN125
	935-033-00	12	ARANDELA DIN125	WASHER DIN125
101.20000.66	935-034-00	13		
	097-007-00	5	ARANDELA DIN125	WASHER DIN125
101.22000.66	935-008-00	11	ARANDELA DIN125	WASHER DIN125
101.30000.66	935-014-00	5	ARANDELA DIN125	WASHER DIN125
	935-019-00	8	ARANDELA DIN125	WASHER DIN125
101.65000.66	935-036-00	5	ARANDELA DIN125	WASHER DIN125
104.06000.66	935-003-00	7	ARANDELA DIN127	WASHER DIN127
	935-008-00	5	ARANDELA DIN127	WASHER DIN127
	935-014-00	12	ARANDELA DIN127	WASHER DIN127
	937-018-00	5	ARANDELA DIN127	WASHER DIN127
	935-028-00	17	ARANDELA DIN127	WASHER DIN127
	935-029-00	18	ARANDELA DIN127	WASHER DIN127
	935-043-00	7	ARANDELA DIN127	WASHER DIN127
	935-047-00	29	ARANDELA DIN127	WASHER DIN127
104.08000.66	935-001-00	9	ARANDELA DIN127	WASHER DIN127
	935-002-00	17	ARANDELA DIN127	WASHER DIN127
	935-002-00	25	ARANDELA DIN127	WASHER DIN127
	935-004-00	6	ARANDELA DIN127	WASHER DIN127
	935-005-00	17	ARANDELA DIN127	WASHER DIN127
	935-007-00	18	ARANDELA DIN127	WASHER DIN127
	935-007-00	21	ARANDELA DIN127	WASHER DIN127
	935-008-00	2	ARANDELA DIN127	WASHER DIN127
	935-009-00	20	ARANDELA DIN127	WASHER DIN127
	935-010-00	3	ARANDELA DIN127	WASHER DIN127
	935-013-00	14	ARANDELA DIN127	WASHER DIN127

Referencia *Reference*	Tabla *Board*	Fig. Nº *Fig. Nr*	Denominación *Denomination*	
	935-014-00	8	ARANDELA DIN127	WASHER DIN127
	935-014-00	17	ARANDELA DIN127	WASHER DIN127
	935-021-00	11	ARANDELA DIN127	WASHER DIN127
	935-024-00	13	ARANDELA DIN127	WASHER DIN127
	935-028-00	14	ARANDELA DIN127	WASHER DIN127
	935-029-00	16	ARANDELA DIN127	WASHER DIN127
	935-029-00	31	ARANDELA DIN127	WASHER DIN127
	935-031-00	7	ARANDELA DIN127	WASHER DIN127
	935-043-00	10	ARANDELA DIN127	WASHER DIN127
	935-044-00	13	ARANDELA DIN127	WASHER DIN127
	935-044-00	21	ARANDELA DIN127	WASHER DIN127
	935-047-00	40	ARANDELA DIN127	WASHER DIN127
	935-049-00	12	ARANDELA DIN127	WASHER DIN127
104.09000.66	935-013-00	16	ARANDELA DIN127	WASHER DIN127
	935-014-00	25	ARANDELA DIN127	WASHER DIN127
	935-020-00	17	ARANDELA DIN127	WASHER DIN127
104.10000.66	935-002-00	20	ARANDELA DIN127	WASHER DIN127
	935-009-00	4	ARANDELA DIN127	WASHER DIN127
	935-010-00	20	ARANDELA DIN127	WASHER DIN127
	935-025-00	4	ARANDELA DIN127	WASHER DIN127
	935-029-00	14	ARANDELA DIN127	WASHER DIN127
	935-032-00	3	ARANDELA DIN127	WASHER DIN127
	935-034-00	10	ARANDELA DIN127	WASHER DIN127
	935-047-00	34	ARANDELA DIN127	WASHER DIN127
	935-051-00	19	ARANDELA DIN127	WASHER DIN127
104.11000.66	935-010-00	7	ARANDELA DIN127	WASHER DIN127
104.12000.66	935-029-00	27	ARANDELA DIN127	WASHER DIN127
104.14000.66	935-006-00	6	ARANDELA DIN127	WASHER DIN127
	935-009-00	13	ARANDELA DIN127	WASHER DIN127
	097-012-00	4	ARANDELA DIN127	WASHER DIN127
104.16000.66	935-025-00	6	ARANDELA DIN127	WASHER DIN127
104.16000.86	935-033-00	8		
107.08000.10	935-005-00	13	ARANDELA AL	WASHER AL
107.14000.10	935-005-00	18	ARANDELA AL	WASHER AL
	935-010-00	13	ARANDELA AL	WASHER AL
	935-013-00	11	ARANDELA AL	WASHER AL
	097-006-00	22	ARANDELA AL	WASHER AL
	097-009-00	14	ARANDELA AL	WASHER AL
112.08000.66	935-007-00	19	ARANDELA DIN9021	CIR-CLIP INT. DIN9021
	935-031-00	8	ARANDELA DIN9021	CIR-CLIP INT. DIN9021
	935-047-00	35	ARANDELA DIN9021	CIR-CLIP INT. DIN9021
	935-051-00	20	ARANDELA DIN9021	CIR-CLIP INT. DIN9021
112.10000.66	935-007-00	15	ARANDELA DIN9021	CIR-CLIP INT. DIN9021
115.08000.66	935-003-00	3		
117.09000.66	935-029-00	22	ARANDELA DIN434*	WASHER DIN434*
119.02805.66	097-006-00	21	ARANDELA.	WASHER
201.00218.50	937-018-00	25	JUNTA DIN3770	O-RING DIN3770
201.01725.50	935-020-00	12	JUNTA DIN3770	O-RING DIN3770
201.02104.50	097-002-00	20	JUNTA DIN3770	O-RING DIN3770
201.03002.50	097-002-00	11	JUNTA DIN3770	O-RING DIN3770
201.03335.50	935-017-00	13	JUNTA DIN3770	O-RING DIN3770
	097-004-00	14	JUNTA DIN3770	O-RING DIN3770
201.04705.50	935-020-00	11	JUNTA DIN3770	O-RING DIN3770
201.05153.50	935-037-00	10	JUNTA DIN3770	O-RING DIN3770
201.07025.50	097-008-00	13	JUNTA DIN3770	O-RING DIN3770
201.07202.50	097-005-00	10	JUNTA DIN3770	O-RING DIN3770
201.14602.50	097-001-00	15	JUNTA DIN3770	O-RING DIN3770
201.22003.50	935-037-00	4	JUNTA DIN3770	O-RING DIN3770
201.30004.50	935-037-00	13	JUNTA DIN3770	O-RING DIN3770
201.40002.50	935-002-00	13	JUNTA DIN3770	O-RING DIN3770
201.75003.50	935-040-00	3	JUNTA DIN3770	O-RING DIN3770
	935-041-00	3	JUNTA DIN3770	O-RING DIN3770
	935-043-00	5	JUNTA DIN3770	O-RING DIN3770
202.02508.50	097-002-00	10	RETEN DIN3760	SEAL DIN3760
202.04006.50	097-002-00	13	RETEN DIN3760	SEAL DIN3760
	097-003-00	9	RETEN DIN3760	SEAL DIN3760
202.30008.50	935-016-00	16	RETEN DIN3760	SEAL DIN3760
202.45008.50	935-014-00	6		
203.30008.50	935-037-00	11	RASCADOR	WIPER RING
207.04032.50	935-017-00	12		
	097-004-00	15		
207.05543.50	935-020-00	13		

Referencia *Reference*	Tabla *Board*	Fig. Nº *Fig. Nr*	Denominación *Denomination*	
207.63028.50	935-037-00	2	JUNTA ESTAN. COMP.	GASKET
216.01007.50	097-009-00	7	RETEN RECUBIE. LD	SEAL
216.01407.50	097-008-00	4	RETEN RECUBIE. LD	SEAL
216.03007.50	097-005-00	6	RETEN RECUBIE. LD	SEAL
216.03510.50	097-006-00	3	RETEN RECUBIE. LD	SEAL
217.30006.50	935-037-00	8	JUNTA DIN6505	GASKET DIN6505
223.02047.66	097-001-00	5	ANILLO OBTURADOR	OBTURATING RING
228.02230.50	935-017-00	15	RASCADOR	WIPER RING
	097-004-00	13	RASCADOR	WIPER RING
228.02836.50	935-020-00	9	RASCADOR	WIPER RING
229.02228.50	935-017-00	14	JUNTA DIN6505	GASKET DIN6505
	097-004-00	12	JUNTA DIN6505	GASKET DIN6505
229.02838.50	935-020-00	10	JUNTA DIN6505	GASKET DIN6505
231.01403.50	097-008-00	5	RETEN DIN3760	SEAL DIN3760
301.20015.00	935-011-00	25	RODAMIENTO DIN625	BEARING DIN625
	097-006-00	9	RODAMIENTO DIN625	BEARING DIN625
	097-007-00	8	RODAMIENTO DIN625	BEARING DIN625
301.25015.00	935-012-02	10	RODAMIENTO DIN625	BEARING DIN625
	097-002-00	9	RODAMIENTO DIN625	BEARING DIN625
301.30016.00	935-011-00	28	RODAMIENTO DIN625	BEARING DIN625
	097-002-00	18	RODAMIENTO DIN625	BEARING DIN625
301.35017.00	097-006-00	4	RODAMIENTO DIN625	BEARING DIN625
301.40018.00	935-012-02	9	RODAMIENTO DIN625	BEARING DIN625
301.4008.00	097-002-00	8		
301.45019.00	935-014-00	34	RODAMIENTO DIN625	BEARING DIN625
306.20015.00	935-011-00	14	RODAMIEN. DIN5412	BEARING DIN5412
306.40018.00	935-014-00	32	RODAMIEN. DIN5412	BEARING DIN5412
307.20015.00	935-016-00	20	RODAMIENTO DIN720	BEARING DIN720
	097-001-00	10	RODAMIENTO DIN720	BEARING DIN720
307.25016.00	935-016-00	18	RODAMIENTO DIN720	BEARING DIN720
307.35018.00	097-005-00	4	RODAMIE. RODILLOS	ROLLING BEARING
309.17012.00	935-003-00	4	RODAMIENTO DIN625	BEARING DIN625
309.25015.00	097-002-00	25	RODAMIENTO DIN625	BEARING DIN625
309.65033.00	935-036-00	4	RODAMIENTO DIN625	BEARING DIN625
310.35017.00	097-003-00	3	RODAMIEN. DIN5412	BEARING DIN5412
312.25017.00	097-003-00	6	RODAMIEN. DIN5412	BEARING DIN5412
312.30016.00	097-002-00	16	RODAMIEN. DIN5412	BEARING DIN5412
318.30013.00	935-034-00	4	RODAMIENTO DIN625	BEARING DIN625
320.30016.00	935-011-00	2	RODAMIEN. DIN5412	BEARING DIN5412
328.20015.00	935-011-00	9	RODAMIENTO DIN618	BEARING DIN618
401.02020.60	937-018-00	15	PASADOR DIN94	SPLIT PIN DIN94
	935-021-00	14	PASADOR DIN94	SPLIT PIN DIN94
	935-022-00	7	PASADOR DIN94	SPLIT PIN DIN94
	935-024-00	5	PASADOR DIN94	SPLIT PIN DIN94
	935-024-00	20	PASADOR DIN94	SPLIT PIN DIN94
	097-008-00	22	PASADOR DIN94	SPLIT PIN DIN94
	097-009-00	4	PASADOR DIN94	SPLIT PIN DIN94
401.02020.66	097-009-00	19		
401.04030.60	935-009-00	22	PASADOR DIN94	SPLIT PIN DIN94
401.04050.60	935-014-00	43	PASADOR DIN94	SPLIT PIN DIN94
401.25030.60	935-014-00	10	PASADOR DIN94	SPLIT PIN DIN94
	935-016-00	11	PASADOR DIN94	SPLIT PIN DIN94
402.04020.00	097-007-00	3	PASADOR DIN1481	ROLL PIN DIN1481
	097-008-00	3	PASADOR DIN1481	ROLL PIN DIN1481
402.04040.00	097-007-00	7	PASADOR DIN1481	ROLL PIN DIN1481
402.05030.00	935-008-00	8	PASADOR DIN1481	ROLL PIN DIN1481
402.06015.00	935-003-00	9	PASADOR DIN1481	ROLL PIN DIN1481
402.06030.00	935-021-00	7	PASADOR DIN1481	ROLL PIN DIN1481
	935-034-00	12	PASADOR DIN1481	ROLL PIN DIN1481
402.35030.00	935-021-00	8	PASADOR DIN1481	ROLL PIN DIN1481
403.06020.00	097-001-00	12	PASADOR DIN6325	
403.10030.00	935-008-00	10	PASADOR DIN6325	
403.10035.00	097-001-00	17	PASADOR DIN6325	
469.03014.00	935-002-00	23	MAT. TUBO B/P	HOSE L/P MAT.
472.00411.00	935-007-00	12	MAT. PERFIL GOMA	RUBBER PROFILE MAT.
502.03000.60	935-054-00	15	REMACHE DIN1476	RIVET DIN1476
502.05000.66	935-005-00	7		
601.06025.86	935-053-00	3	TORNILLO DIN912	SCREW DIN912
601.08020.86	935-044-00	14	TORNILLO DIN912	SCREW DIN912
	097-001-00	8	TORNILLO DIN912	SCREW DIN912
601.08025.86	935-019-00	1	TORNILLO DIN912	SCREW DIN912
601.08040.86	097-001-00	16	TORNILLO DIN912	SCREW DIN912

Referencia *Reference*	Tabla *Board*	Fig. Nº *Fig. Nr*	Denominación *Denomination*	
601.10030.86	097-007-00	2	TORNILLO DIN912	SCREW DIN912
601.12025.86	935-044-00	10		
603.05010.86	935-033-00	2	TORNILLO DIN933	SCREW DIN933
603.05015.86	935-051-00	43	TORNILLO DIN933	SCREW DIN933
603.06015.86	935-003-00	8	TORNILLO DIN933	SCREW DIN933
	935-008-00	4	TORNILLO DIN933	SCREW DIN933
	935-009-00	17	TORNILLO DIN933	SCREW DIN933
	935-014-00	14	TORNILLO DIN933	SCREW DIN933
	937-018-00	23	TORNILLO DIN933	SCREW DIN933
	935-020-00	18	TORNILLO DIN933	SCREW DIN933
	935-037-00	16	TORNILLO DIN933	SCREW DIN933
	935-043-00	8	TORNILLO DIN933	SCREW DIN933
	935-047-00	22	TORNILLO DIN933	SCREW DIN933
	935-051-00	11	TORNILLO DIN933	SCREW DIN933
	097-009-00	2	TORNILLO DIN933	SCREW DIN933
603.06015.96	935-029-00	19		
	935-045-00	6		
603.06020.86	097-006-00	12	TORNILLO DIN933	SCREW DIN933
603.06025.86	935-038-00	6	TORNILLO DIN933	SCREW DIN933
	097-006-00	1	TORNILLO DIN933	SCREW DIN933
	097-008-00	21	TORNILLO DIN933	SCREW DIN933
603.06030.86	935-047-00	27	TORNILLO DIN933	SCREW DIN933
	935-051-00	33	TORNILLO DIN933	SCREW DIN933
603.07040.86	097-009-00	11	TORNILLO DIN933	SCREW DIN933
603.08015.86	935-008-00	3	TORNILLO DIN933	SCREW DIN933
	935-024-00	2	TORNILLO DIN933	SCREW DIN933
	935-029-00	9	TORNILLO DIN933	SCREW DIN933
	935-044-00	19	TORNILLO DIN933	SCREW DIN933
	935-049-00	10	TORNILLO DIN933	SCREW DIN933
603.08020.86	935-001-00	8	TORNILLO DIN933	SCREW DIN933
	935-007-00	22	TORNILLO DIN933	SCREW DIN933
	935-021-00	12	TORNILLO DIN933	SCREW DIN933
	935-024-00	23	TORNILLO DIN933	SCREW DIN933
	935-028-00	13	TORNILLO DIN933	SCREW DIN933
	935-043-00	9	TORNILLO DIN933	SCREW DIN933
	935-047-00	39	TORNILLO DIN933	SCREW DIN933
	935-051-00	26	TORNILLO DIN933	SCREW DIN933
603.08025.00	935-010-00	2		
603.08025.86	935-002-00	29	TORNILLO DIN933	SCREW DIN933
	935-009-00	21	TORNILLO DIN933	SCREW DIN933
	935-013-00	13	TORNILLO DIN933	SCREW DIN933
	935-029-00	26	TORNILLO DIN933	SCREW DIN933
	935-031-00	6	TORNILLO DIN933	SCREW DIN933
	935-043-00	3	TORNILLO DIN933	SCREW DIN933
	935-049-00	8	TORNILLO DIN933	SCREW DIN933
603.08030.86	935-007-00	17	TORNILLO DIN933	SCREW DIN933
	935-017-00	16	TORNILLO DIN933	SCREW DIN933
603.08030.86	097-001-00	14	TORNILLO DIN933	SCREW DIN933
603.08045.86	935-006-00	11	TORNILLO DIN933	SCREW DIN933
603.09030.86	935-014-00	21	TORNILLO DIN933	SCREW DIN933
603.10020.86	935-047-00	33	TORNILLO DIN933	SCREW DIN933
	935-051-00	17	TORNILLO DIN933	SCREW DIN933
603.10025.86	935-006-00	15	TORNILLO DIN933	SCREW DIN933
603.10025.96	097-001-00	19	TORNILLO DIN933	SCREW DIN933
603.10030.86	935-034-00	9	TORNILLO DIN933	SCREW DIN933
603.10080.86	935-014-00	27	TORNILLO DIN933	SCREW DIN933
603.12025.86	935-006-00	14	TORNILLO DIN933	SCREW DIN933
603.12030.86	935-031-00	9	TORNILLO DIN933	SCREW DIN933
603.12035.86	097-001-00	26	TORNILLO DIN933	SCREW DIN933
603.14040.86	935-009-00	9	TORNILLO DIN933	SCREW DIN933
604.08040.86	935-002-00	16	TORNILLO DIN931	SCREW DIN931
	935-024-00	8	TORNILLO DIN931	SCREW DIN931
	097-009-00	8	TORNILLO DIN931	SCREW DIN931
604.08070.86	935-002-00	28	TORNILLO DIN931	SCREW DIN931
	935-024-00	10	TORNILLO DIN931	SCREW DIN931
604.08080.86	097-005-00	3	TORNILLO DIN931	SCREW DIN931
604.10030.86	935-009-00	2	TORNILLO DIN931	SCREW DIN931
604.10035.86	935-006-00	9	TORNILLO DIN931	SCREW DIN931
	935-021-00	20	TORNILLO DIN931	SCREW DIN931
604.10120.86	935-035-00	5	TORNILLO DIN931	SCREW DIN931
604.12045.86	935-038-00	8	TORNILLO DIN931	SCREW DIN931
604.12050.86	935-038-00	7	TORNILLO DIN931	SCREW DIN931

Referencia *Reference*	Tabla *Board*	Fig. Nº *Fig. Nr*	Denominación *Denomination*	
604.14065.86	097-012-00	5	TORNILLO DIN931	SCREW DIN931
604.14075.86	935-009-00	14	TORNILLO DIN931	SCREW DIN931
604.14080.86	935-006-00	1	TORNILLO DIN931	SCREW DIN931
604.16060.86	935-033-00	10	TORNILLO DIN931	SCREW DIN931
604.16090.86	935-033-00	11	TORNILLO DIN931	SCREW DIN931
604.16100.86	935-033-00	9	TORNILLO DIN931	SCREW DIN931
604.16140.00	935-039-00	2		
605.08020.86	935-029-00	30		
605.10020.86	935-029-00	15		
605.10025.86	935-032-00	2		
605.12020.66	935-029-00	29		
608.05010.86	935-007-00	4		
612.08025.86	097-008-00	9	TORNILLO DIN914	SCREW DIN814
618.08020.86	935-010-00	11	TORNILLO DIN7991	SCREW DIN7991
621.38015.86	935-002-00	18	TORNILLO DIN912	SCREW DIN912
621.51620.86	935-003-00	2	TORNILLO DIN912	SCREW DIN912
624.06015.66	935-010-00	23	TORNILLO DIN963	SCREW DIN63
627.38030.86	935-009-00	3	TORNILLO DIN931	SCREW DIN931
630.06015.86	937-018-00	4		
630.06015.96	935-031-00	15	TORNILLO ISO7380	SCREW ISO7380
630.06015.96	935-048-00	9	TORNILLO ISO7380	SCREW ISO7380
630.06015.96	935-050-00	3	TORNILLO ISO7380	SCREW ISO7380
630.06015.96	935-052-00	3	TORNILLO ISO7380	SCREW ISO7380
630.08020.96	935-004-00	5	TORNILLO ISO7380	SCREW ISO7380
630.08020.96	935-005-00	12	TORNILLO ISO7380	SCREW ISO7380
630.08020.96	935-024-00	12	TORNILLO ISO7380	SCREW ISO7380
630.08020.96	935-028-00	11	TORNILLO ISO7380	SCREW ISO7380
630.08025.86	935-028-00	3	TORNILLO ISO7380	SCREW ISO7380
630.08025.86	935-005-00	3	TORNILLO ISO7380	SCREW ISO7380
630.08060.96	935-042-00	4	TORNILLO ISO7380	SCREW ISO7380
630.10030.96	935-025-00	5	TORNILLO ISO7380	SCREW ISO7380
631.08020.86	935-029-00	4		
701.05000.66	935-007-00	2	TUERCA DIN934	NUT DIN934
701.06000.66	937-018-00	6	TUERCA DIN934	NUT DIN934
701.06000.66	937-018-00	10	TUERCA DIN934	NUT DIN934
701.06000.66	935-028-00	18	TUERCA DIN934	NUT DIN934
701.06000.66	935-047-00	24	TUERCA DIN934	NUT DIN934
701.06000.66	935-047-00	30	TUERCA DIN934	NUT DIN934
701.06000.66	935-051-00	13	TUERCA DIN934	NUT DIN934
701.06000.66	935-051-00	31	TUERCA DIN934	NUT DIN934
701.07000.66	097-009-00	10	TUERCA DIN934	NUT DIN934
701.07000.86	935-021-00	16	TUERCA DIN934	NUT DIN934
701.08000.60	935-024-00	24		
701.08000.66	935-002-00	26	TUERCA DIN934	NUT DIN934
701.08000.66	935-004-00	7	TUERCA DIN934	NUT DIN934
701.08000.66	935-007-00	5	TUERCA DIN934	NUT DIN934
701.08000.66	935-014-00	9	TUERCA DIN934	NUT DIN934
701.08000.66	935-014-00	16	TUERCA DIN934	NUT DIN934
701.08000.66	935-024-00	14	TUERCA DIN934	NUT DIN934
701.08000.66	935-028-00	12	TUERCA DIN934	NUT DIN934
701.08000.66	935-029-00	23	TUERCA DIN934	NUT DIN934
701.08000.66	935-043-00	12	TUERCA DIN934	NUT DIN934
701.08000.66	935-044-00	22	TUERCA DIN934	NUT DIN934
701.08000.66	935-047-00	41	TUERCA DIN934	NUT DIN934
701.08000.66	935-049-00	13	TUERCA DIN934	NUT DIN934
701.08000.66	935-051-00	28	TUERCA DIN934	NUT DIN934
701.08000.66	097-008-00	8	TUERCA DIN934	NUT DIN934
701.09000.66	935-013-00	17	TUERCA DIN934	NUT DIN934
701.10000.66	935-010-00	21	TUERCA DIN934	NUT DIN934
701.10000.66	935-021-00	19	TUERCA DIN934	NUT DIN934
701.10000.66	935-032-00	4	TUERCA DIN934	NUT DIN934
701.10000.66	935-034-00	11	TUERCA DIN934	NUT DIN934
701.10000.66	935-036-00	7	TUERCA DIN934	NUT DIN934
701.12000.66	935-029-00	24	TUERCA DIN934	NUT DIN934
701.12000.66	935-036-00	3	TUERCA DIN934	NUT DIN934
701.12000.66	097-001-00	27	TUERCA DIN934	NUT DIN934
701.14000.66	935-006-00	7	TUERCA DIN934	NUT DIN934
701.14000.66	935-038-00	15	TUERCA DIN934	NUT DIN934
701.14000.66	097-012-00	2	TUERCA DIN934	NUT DIN934
701.16000.86	935-033-00	7		
709.10000.66	935-004-00	12	TUERCA DIN936	NUT DIN936
709.14000.66	935-051-00	44	TUERCA DIN936	NUT DIN936

Referencia *Reference*	Tabla *Board*	Fig. Nº *Fig. Nr*	Denominación *Denomination*	
710.14000.66	935-016-00	10	TUERCA DIN935	CASTELL. NUT DIN935
711.06000.66	937-018-00	24	TUERCA DIN982	NUT DIN982
	935-031-00	17	TUERCA DIN982	NUT DIN982
	935-053-00	5	TUERCA DIN982	NUT DIN982
	935-056-00	6	TUERCA DIN982	NUT DIN982
	935-056-00	9	TUERCA DIN982	NUT DIN982
	097-008-00	20	TUERCA DIN982	NUT DIN982
711.08000.66	935-005-00	5	TUERCA DIN982	NUT DIN982
	935-013-00	8	TUERCA DIN982	NUT DIN982
	935-042-00	5	TUERCA DIN982	NUT DIN982
711.10000.66	935-007-00	16	TUERCA DIN982	NUT DIN982
	935-032-00	5	TUERCA DIN982	NUT DIN982
	935-035-00	7	TUERCA DIN982	NUT DIN982
711.12000.66	935-038-00	9	TUERCA DIN982	NUT DIN982
	097-001-00	24	TUERCA DIN982	NUT DIN982
718.16000.66	935-020-00	5	TUERCA DIN982	NUT DIN982
718.18000.66	935-016-00	28	TUERCA DIN982	NUT DIN982
723.34000.66	935-040-00	87	TUERCA DIN936*	NUT DIN936*
	935-041-00	82	TUERCA DIN936*	NUT DIN936*
727.06004.86	935-029-00	17	TUERCA ENJAULADA	CAPTIVE NUT
810.00000.00	935-049-00	21		
901.08000.33	935-009-00	23	ENGRAS. DIN71412-A	GREASER DIN71412-A
	935-014-00	13	ENGRAS. DIN71412-A	GREASER DIN71412-A
	935-016-00	6	ENGRAS. DIN71412-A	GREASER DIN71412-A
	935-019-00	4	ENGRAS. DIN71412-A	GREASER DIN71412-A
	935-021-00	6	ENGRAS. DIN71412-A	GREASER DIN71412-A
	935-034-00	7	ENGRAS. DIN71412-A	GREASER DIN71412-A
	935-035-00	4	ENGRAS. DIN71412-A	GREASER DIN71412-A
	935-037-00	18	ENGRAS. DIN71412-A	GREASER DIN71412-A
	097-001-00	7	ENGRAS. DIN71412-A	GREASER DIN71412-A
	097-010-00	3	ENGRAS. DIN71412-A	GREASER DIN71412-A
	097-011-00	4	ENGRAS. DIN71412-A	GREASER DIN71412-A
901.08000.66	935-020-00	14		
902.08000.33	935-016-00	29	ENGRAS. DIN71412-C	GREASER DIN71412-C
904.12000.00	097-008-00	12	ANILLO DIN471	SNAP RING DIN471
904.14000.00	097-006-00	18	ANILLO DIN471	SNAP RING DIN471
	097-008-00	7	ANILLO DIN471	SNAP RING DIN471
904.20000.00	935-011-00	13	ANILLO DIN471	SNAP RING DIN471
904.25000.00	935-012-02	14	ANILLO DIN471	SNAP RING DIN471
904.30000.00	935-011-00	4	ANILLO DIN471	SNAP RING DIN471
	935-019-00	9	ANILLO DIN471	SNAP RING DIN471
904.65000.66	935-036-00	6	ANILLO DIN471	SNAP RING DIN471
905.45000.00	935-013-00	20	ANILLO DIN472	SNAP RING DIN472
905.52000.00	935-011-00	15	ANILLO DIN472	SNAP RING DIN472
	935-012-02	11	ANILLO DIN472	SNAP RING DIN472
	097-002-00	24	ANILLO DIN472	SNAP RING DIN472
905.62000.00	935-011-00	38	ANILLO DIN472	SNAP RING DIN472
905.72000.00	097-003-00	4	ANILLO DIN472	SNAP RING DIN472
905.8000.00	935-014-00	31	ANILLO DIN472	SNAP RING DIN472
906.35000.00	097-005-00	7	ARANDELA DIN6799	WASHER DIN6799
907.35008.00	097-003-00	7	TUERCA DIN934	NUT DIN934
	097-005-00	5	TUERCA DIN934	NUT DIN934
908.08000.66	935-011-00	33		
910.35348.00	935-011-00	21	AGUJA DIN5402	NEEDLE DIN5402
912.08000.66	935-005-00	10		
	935-022-00	10		
912.08016.00	935-002-00	22		
912.08016.66	935-005-00	20	ABRAZAD. DIN3017	CLAMP DIN3017
	935-007-00	26	ABRAZAD. DIN3017	CLAMP DIN3017
	935-040-00	76	ABRAZAD. DIN3017	CLAMP DIN3017
	935-041-00	77	ABRAZAD. DIN3017	CLAMP DIN3017
912.09000.66	935-043-00	16	ABRAZADERA.	CLAMP
912.12140.66	935-007-00	25	ABRAZADERA.	CLAMP
912.20032.00	935-040-00	5	ABRAZADERA.	CLAMP
	935-041-00	5	ABRAZADERA.	CLAMP
912.20032.66	935-007-00	28		
912.32050.66	935-004-00	9	ABRAZAD. DIN3017	CLAMP DIN3017
	935-017-00	4	ABRAZAD. DIN3017	CLAMP DIN3017
912.32050.66	097-004-00	4	ABRAZAD. DIN3017	CLAMP DIN3017
912.40060.66	935-004-00	2	ABRAZADERA.	CLAMP
914.62000.00	935-011-00	3	ANILLO DIN2200	RING DIN2200
923.16030.00	935-021-00	4	COJINETE CIL.	BEARING CYL.

Referencia *Reference*	Tabla *Board*	Fig. Nº *Fig. Nr*	Denominación *Denomination*	
923.18030.00	097-010-00	10	COJINETE CIL.	BEARING CYL.
929.05000.00	935-022-00	19	SOP. GUIA TUBO	TUBE GUIDE SUPPORT
935.25040.66	935-007-00	9	ABRAZADERA.	CLAMP
935.47051.66	935-001-00	6		
937.28002.00	097-006-00	7	ANILLO DIN471*	SNAP RING DIN471*

AUSA